STATE OF TENNESSEE
DEPARTMENT OF ENVIRONMENT AND CONSERVATION
DIVISION OF WATER RESOURCES
William R. Snodgrass Tennessee Tower
312 Rosa L. Parks Avenue, 11th Floor
Nashville, Tennessee 37243
PHONE: 615-532-0191 FAX: 615-532-0686

February 28, 2019

Ms. Patricia McNeese, PE
Franklin Water Department
124 Lumbar Drive
Franklin TN 37064

Re: Franklin Water Department (PWSID# 0000246)
Williamson County
Project Number WS 12-1017
Standard Water Line Construction Specifications

Dear Ms. McNeese:

We acknowledge receipt of a request for an extension of our approval of the above referenced specifications. We have reviewed this request and found it acceptable. Our approval is hereby extended three years and will expire on April 19, 2022. If you have any questions contact us at (615) 532-0191.

Sincerely,

R. William Hench

R. William Hench, P.E.
Drinking Water Engineering
Division of Water Resources

cc: Nashville Field Office - Water Resources

STATE OF TENNESSEE
DEPARTMENT OF ENVIRONMENT AND CONSERVATION
DIVISION OF WATER RESOURCES
William R. Snodgrass - Tennessee Tower
312 Rosa L. Parks Avenue, 11th Floor
Nashville, Tennessee 37243-1102

April 5, 2018

Mr. Scott Andrews
City of Franklin
e-copy: scott.andrews@franklintn.gov
124 Lumber Dr.
Franklin, TN 37064

Subject: **City of Franklin**
County: Williamson
Wastewater Project Number: 13.0436
Project: City of Franklin General Requirements and Technical Specifications

Dear Mr. Andrews:

The Department of Environment and Conservation, Division of Water Resources, on March 19, 2018, has received your request for renewal of the wastewater portion of City of Franklin General Requirements and Technical Specifications, previously approved on May 17, 2013, under project number 13.0436.

On the basis that no revisions were made to the original submittal, this letter shall demonstrate renewal of five year. Approval now expires on April 5, 2023.

To expedite matters, please reference the assigned wastewater project number 13.0436 on any future correspondence. If we may be of any assistance, please feel free to contact Mr. Adnan Bahour, Ph.D. at (615) 532-0638 or by E-mail at Adnan.Bahour@tn.gov.

Sincerely,

Vojin Janjić
Manager, Water-Based Systems

cc: Water-Based Systems File
Ms. Patricia McNeese, City of Franklin, patricia.mcneese@franklintn.gov
Ms. April Vann Grippo, Unit Manager, TDEC Division of Water Resources, April.Grippo@tn.gov

STATE OF TENNESSEE
DEPARTMENT OF ENVIRONMENT AND CONSERVATION
DIVISION OF WATER RESOURCES
William R. Snodgrass - Tennessee Tower
312 Rosa L. Parks Avenue, 11th Floor
Nashville, Tennessee 37243-1102

April 29, 2016

Ms. Patricia McNeese, P.E.
City of Franklin
e-copy: patricia.mcneese@franklintn.gov
109 3rd Ave. S.
Franklin, TN 37064

Subject: **City of Franklin Water Management Dept.**
County: Williamson
Wastewater Project Number: 13-0436
Project: City of Franklin General Requirements and Technical Specifications

Dear Ms. McNeese:

The Department of Environment and Conservation, Division of Water Resources, has received your request for an extension of time for the above project on April 22, 2016, previously this project was approved under project number 13-0436 on May 17, 2013.

Your extension for City of Franklin General Requirements and Technical Specifications is granted until April 29, 2017.

The division's most recent TDEC Technical/Engineering Documents, including "Design Criteria for Sewage Works", Chapters 1-17 is available on our website: http://tn.gov/environment/article/wr-wq-water-quality-reports-publications.

To expedite matters, please reference the assigned wastewater project number 13-0436 on any future correspondence. If we may be of any assistance, please feel free to contact Mr. Adnan Bahour, Ph.D. (615) 532-0638 or by E-mail at *Adnan.Bahour@tn.gov*.

Sincerely,

Vojin Janjić
Manager, Water-Based Systems

cc: Water-Based Systems File
Ms. Ann M. Morbitt, Unit Manager, TDEC Division of Water Resources, Ann.Morbitt@tn.gov

STATE OF TENNESSEE
DEPARTMENT OF ENVIRONMENT AND CONSERVATION
DIVISION OF WATER RESOURCES
William R. Snodgrass Tennessee Tower
312 Rosa L. Parks Avenue, 11th Floor
Nashville, Tennessee 37243
PHONE: 615-532-0191 FAX: 615-532-0686

April 19, 2016

Ms. Patricia McNeese, PE
Franklin Engineering Department
109 Third Avenue South, Suite 142
Franklin TN 37064

Re: Franklin Water Department (PWSID# 0000246)
Williamson County
Project Number WS 12-1017
Standard Water Line Construction Specifications

Dear Ms. McNeese:

We acknowledge receipt of a request for an extension of our approval of the above referenced specifications. We have reviewed this request and found it acceptable. Our approval is hereby extended three years and will expire on April 19, 2019. If you have any questions contact us at (615) 532-0191.

Sincerely,

R. William Hench

R. William Hench, P.E.
Drinking Water Engineering
Division of Water Resources

cc: Nashville Field Office - Water Resources

STATE OF TENNESSEE
DEPARTMENT OF ENVIRONMENT AND CONSERVATION
DIVISION OF WATER RESOURCES
William R. Snodgrass Tennessee Tower
312 Rosa L. Parks Avenue, 11th Floor
Nashville, Tennessee 37243
PHONE: 615-532-0191 FAX: 615-532-0686

April 19, 2016

Ms. Patricia McNeese, PE
Franklin Engineering Department
109 Third Avenue South, Suite 142
Franklin TN 37064

Re: Franklin Water Department (PWSID# 0000246)
Williamson County
Project Number WS 12-1017
Standard Water Line Construction Specifications

Dear Ms. McNeese:

We acknowledge receipt of a request for an extension of our approval of the above referenced specifications. We have reviewed this request and found it acceptable. Our approval is hereby extended three years and will expire on April 19, 2019. If you have any questions contact us at (615) 532-0191.

Sincerely,

R. William Hench

R. William Hench, P.E.
Drinking Water Engineering
Division of Water Resources

cc: Nashville Field Office - Water Resources

STATE OF TENNESSEE
DEPARTMENT OF ENVIRONMENT AND CONSERVATION
DIVISION OF WATER RESOURCES
Water Supply Section
6th Floor L & C Tower, 401 Church Street
Nashville, Tennessee 37243-1539
PHONE: 615-532-0191 FAX: 615-532-0503
For Local ENVIRONMENTAL ASSISTANCE CENTERS
Call 1-888-891-TDEC

May 6, 2013

Ms. Patricia Proctor, PE
City of Franklin Engineering Department
109 Third Avenue South, Suite 142
Franklin TN 37064

RE: Franklin Water Department (PWSID# 0000246)
Williamson County
Project Number WS 12-1017
Revisions to Standard Specifications for Water Line Construction

Dear Ms. Proctor:

This letter acknowledges receipt of two copies of revisions to the standard construction specifications for the Franklin Water Department. We have reviewed the revisions and found them satisfactory. The specifications have been stamped to indicate our approval. This approval is valid for three years and will expire on May 6, 2016. You must then either resubmit the standard specifications or request in writing for extension of approval.

The approved standard specifications may be referenced on any plans submitted for approval before the expiration date. We are retaining one copy of the standard specifications for our records, and are returning the remaining copies to you. All revisions or correspondence concerning these specifications should contain the WS Project Number as referenced. If you have any questions contact us at (615) 532-0191.

Very truly yours,

R. William Hench, P.E.
Manager, Water Supply Engineering Program
Division of Water Resources

RWH/ DWS-35

cc: Nashville Field Office – Water Resouces, Water Supply Section

General Requirements and Technical Specifications
Water Management Department
City of Franklin, Tennessee

HISTORIC
FRANKLIN
TENNESSEE

APPROVED FOR CONSTRUCTION
THE ENGINEERING REPORT FOR THE PROJECT HAS BEEN REVIEWED BY THE
TENNESSEE DEPARTMENT OF ENVIRONMENT AND CONSERVATION
DIVISION OF WATER SUPPLY
AND IS FOUND TO BE ACCEPTABLE
MAY 06 2013
THE APPROVAL OF THE PLANS AND SPECIFICATIONS DOES NOT CONSTITUTE
APPROVAL OF THE ENGINEERING DESIGN OR ENGINEERING FACILITIES
WITH RESPECT TO PROPER OPERATION FOR THE COMMISSIONER
BY TITLE

PATRICIA G. PROCTOR
REGISTERED ENGINEER
AGRICULTURE
COMMERCE
NO. 107277
STATE OF TENNESSEE

APPROVAL EXPIRES
MAY 06 2016
TENN DEPT OF ENVIRONMENT & CONSERVATION
DIVISION OF WATER SUPPLY

Approved: Paul P Holzen

Paul Holzen, P.E.
Director of Engineering

WS 12-1017

STATE OF TENNESSEE
DEPARTMENT OF ENVIRONMENT AND CONSERVATION
401 CHURCH STREET 6TH FLOOR L&C ANNEX
NASHVILLE, TENNESSEE 37243

May 17, 2013

Ms. Patricia Proctor, P.E.
Utilities Project Manager
City of Franklin Water Management Department
109 Third Avenue South, Suite 142
Franklin, TN 37064

Re: General Requirements and Technical Specifications
City of Franklin Water Management Department
Wastewater Project Number 13-0436
Williamson County, Tennessee

Dear Ms. Proctor:

The Tennessee Department of Environment and Conservation, Division of Water Resources, acknowledges the receipt of two sets of revised specifications from you on April 26, 2013. The division has reviewed these specifications and finds them acceptable. We have written "Approved" on both sets, signed them, and indicated the approval's expiration date. We have returned one set to you for your files and retained one set for our records.

If you have any questions or if we may be of any assistance, please feel free to contact me either by phone at (615) 532-0358 or by e-mail at *Phil.Simmons@tn.gov*.

Sincerely,

Philip M. Simmons

Philip M. Simmons, P.E.
Environmental Protection Specialist
Water Quality Branch
Division of Water Resources

Enclosures

cc: Mike Thornton, Nashville Environmental Field Office, Division of Water Resources

TABLE OF CONTENTS

Division No. Section Title Page No.

GENERAL REQUIREMENTS SUBGROUP

DIVISION 01 – GENERAL REQUIREMENTS

01 0000 General Information and Requirements 1
01 2219 Measurement and Payment 7
01 2600 Contract Modification Procedures 16
01 2900 Payment Procedures 20
01 3100 Project Management and Coordination 23
01 3300 Submittal Procedures 28
01 4000 Quality Requirements 35
01 4200 References 42
01 5000 Temporary Facilities and Controls 49
01 6000 Product Requirements 55
01 7300 Execution 60
01 7700 Closeout Procedures 66
01 7839 Project Record Documents 70

FACILITY CONSTRUCTION SUBGROUP

DIVISION 03 – CONCRETE

03 3000 Cast-In-Place Concrete 73

SITE AND INFRASTRUCTURE SUBGROUP

DIVISION 31 – EARTHWORK

31 0000 Earthwork 80
31 2319 Dewatering 85
31 5000 Excavation Support and Protection 87

DIVISION 32 – EXTERIOR IMPROVEMENTS

32 3113 Chain Link Fences and Gates 89
32 9219 Seeding 95

DIVISION 33 – UTILITIES

..... General Design Requirements 98
33 0131 Rehabilitation of Sewer Utilities 99
33 0133 Rehabilitation of Manholes 110
33 0523 Trenchless Installation of Utilities 119
33 1100 Water Utility Distribution Piping 132
33 1216 Valves 153
33 1219 Hydrants 166
33 1233 Water Service Assemblies 170
33 1234 Reclaimed Water Service Assemblies 176
33 3113 Sanitary Sewer (Gravity) 180
33 3115 Sewer Flow Control 205
33 3125 Sewer Cleaning 210
33 3130 Sewer Television Inspection 214

© 2012 City of Franklin, Tennessee. All rights reserved.

TABLE OF CONTENTS

33 3213..... Packaged Sewage Pumping Stations 221
33 3300..... Reclaimed Water Distribution Piping.....245
33 3400..... Sewage Force Main 265
33 3913..... Manholes.....279
33 3914..... Low Pressure Grinder Pump Stations 287

STANDARD DETAIL DRAWINGS

GENERAL CONSTRUCTION

G – 1.....Concrete Valve Box……2
G – 2.....Chain-Link Fence with Double 6' Gates…….
G – 3.....2" Blow-off Assembly…….....
G – 4.....Restrained Joint Table – PVC……..
G – 5.....Restrained Joint Table – DIP…….
G – 6.....Concrete Protection for Buried Utilities……...
G – 7.....Concrete Cap for Utility Lines…….
G – 8.....Combination Air Valve Assembly for Pressure Mains……
G – 9.....Bedding and Backfilling for Pressure Lines…….
G – 10.....Bedding and Backfilling for Gravity Lines……..
G – 11.....Butyl Mastic Gasket for Precast Manhole Sections…….
G – 12.....Thrust Collar Installation…….
G – 13.....Bore and Jack Casing……

RECLAIMED WATER CONSTRUCTION

RW – 1 .....¾" Reclaimed Water Service Assembly…….
RW – 2 .....Air Release Assembly for Reclaimed Water Mains……
RW – 3 .....Reclaimed Water Valve Box Setting……...

WASTEWATER CONSTRUCTION

WW – 1 .....Precast Concrete Manhole……...
WW – 2 .....Manhole Steps…….
WW – 3 .....Sanitary Sewer Laterals……..
WW – 4 .....Resilient Boot Manhole Connection……...
WW – 5 .....Manhole Vent……..
WW – 6 .....Manhole Frame and Cover……..
WW – 7 .....Lateral Service Connection to New Sanitary Sewer Force Main……
WW – 8 .....Drop Connection to Existing Manhole……
WW – 9 .....1" Auto Air Release Valve on Low Pressure Sanitary Sewer Main……
WW – 10 ...Concrete Anchors for Sewers on Steep Grades……...
WW – 11 ...Valve Box & Cleanout Arrangement At Junction of Low Pressure Mains…….
WW – 12 ...Low Pressure Sewer System End of Line Flushing Assembly……
WW – 13 ...Low Pressure Sewer Connection To Fiberglass Manhole……

WATER CONSTRUCTION

W – 1.....Valve Box Setting……
W – 2.....Fire Hydrant Setting……
W – 3.....Reduced Pressure Backflow Preventer for ¾" and 1" Irrigation Lines……
W – 4.....Reduced Pressure Backflow Preventer for 4" to 8" Lines (Above Ground) ……...
W – 5.....Reduced Pressure Backflow Preventer for 1.5" and 2" Lines……..
W – 6.....Double Check Valve Assembly for 4" to 8" Lines (Below Ground) ……..
W – 7.....Air Release Assembly for Water Mains……...

© 2012 City of Franklin, Tennessee. All rights reserved.

TABLE OF CONTENTS

W – 8.....2” Meter Assembly……
W – 9.....¾” Water Service Assembly……..
W – 10.....3” Meter Assembly……
W – 11.....4” to 8” Compound Meter Assembly…….
W – 12.....4” to 8” Fire Meter Assembly……

END OF TABLE OF CONTENTS

© 2012 City of Franklin, Tennessee. All rights reserved.

GENERAL INFORMATION AND REQUIREMENTS
Section 01 0000

PART 1 - GENERAL

1.1 PURPOSE STATEMENT

A. These Specifications are guidelines for Engineers, Contractors, and Developers for the planning, design, and construction of water distribution systems, wastewater collection systems, reclaimed water systems, and associated appurtenances within the City of Franklin, Tennessee Water Management Department service area. The Specifications identify standards, criteria, submittal requirements, and approval procedures to be used for projects within the City of Franklin.

B. These Specifications apply to water, wastewater, and reclaimed water infrastructure projects that are funded by the City of Franklin and privately funded development projects occurring on public and/or private property.

C. These Specifications shall govern the construction materials and installation of water, wastewater, and reclaimed water systems that are, or will become, the responsibility of the City of Franklin to operate and maintain as part of their system.

D. These Specifications are intended to meet or exceed the requirements of the State of Tennessee's Department of Environment and Conservation (TDEC).

E. These Specifications are not intended to serve as a step-by-step design and construction method nor can this manual address every situation that may arise. The application of sound engineering/surveying principles combined with the information contained herein is necessary to complete the planning, design, and construction of water, wastewater, and reclaimed water systems.

1.2 RELATED DOCUMENTS

A. Drawings and general provisions of the Contract, including General and Supplementary Conditions and other Division 01 Specification Sections, apply to this Section.

1.3 DEFINITIONS

A. Contractor: The person, firm, or corporation with whom owner has executed an Agreement.

B. Developer: One who owns a proposed development where water, wastewater, or reclaimed water infrastructure is to be installed.

C. Engineer: One who prepared the construction plans for the installation of water, wastewater, or reclaimed water infrastructure for a proposed development or City of Franklin-funded project. The Engineer must be licensed in the State of Tennessee.

D. Final Completion: The time at which the Work is fully complete.

E. Owner: City of Franklin, Tennessee

F. Resident Project Representative: City of Franklin Water Management Department Inspector.

© 2012 City of Franklin, Tennessee. All rights reserved.

G. Subcontractor: An individual or entity having a direct contract with Contractor or with any other Subcontractor for the performance of a part of the Work at the site.

H. Substantial Completion: The date as certified by Engineer when the construction of the Project or a specified part thereof is sufficiently completed, in accordance with the Contract Documents, so that the Project or specified part can be utilized by the Owner for the purposes for which it was intended; or if there be no such certification, the date when final payment is due.

I. Work: Any and all obligations, duties and responsibilities necessary to the successful completion of the Project assigned to or undertaken by Contractor per the Contract Documents.

1.4 SUMMARY

A. The following are acronyms used throughout this document:
   1. AWWA: American Water Works Association
   2. COF: City of Franklin
   3. TDEC: Tennessee Department of Environment and Conservation
   4. WMD: Water Management Department

1.5 CONTACT INFORMATION

A. City of Franklin Water Management Department
405 Hillsboro Road
Franklin, TN 37064
(615) 794-4554

B. City of Franklin Fire Department
Administration
109 3rd Avenue South, Suite 133
Franklin, TN 37064
(615) 791-3270

C. City of Franklin Engineering Department
109 3rd Avenue South, Suite 142
Franklin, TN 37064
(615) 791-3218

D. Tennessee Department of Environment and Conservation (TDEC)
Division of Water Pollution Control (DWPC)
6th Floor, L & C Annex
401 Church Street
Nashville, TN 37243
(615) 532-0625

E. Tennessee Department of Environment and Conservation (TDEC)
Division of Water Supply (DWS)

© 2012 City of Franklin, Tennessee. All rights reserved.

6th Floor, L & C Tower
401 Church Street
Nashville, TN 37243
(615) 532-0191

F. City of Franklin Streets Department
108 Southeast Parkway
Franklin, TN 37064
(615) 791-3254

G. Williamson County Highway Department
1556 Columbia Avenue
Franklin, TN 37064
(615) 790-5596

H. City of Franklin Police Department
Communications Division
900 Columbia Avenue
Franklin, TN 37064
(615) 794-2513

I. Williamson County Department of Emergency Communications (911)
1320 West Main Street, Suite B-25
Franklin, TN 37064
(615) 790-5757

J. City of Franklin Traffic Operations Center
City Hall
109 3rd Avenue South
Franklin, TN 37064
(615) 791-3218

1.6 GENERAL REQUIREMENTS

A. General: The Contractor shall have full use of premises for construction operations, including use of project site, during construction. Contractor's use of premises is limited only by Owner's right to perform Work or to retain other contractors on portions of project and conditions of any easement or right-of-way occupancy permits.

B. Prior to commencement of Work, the Contractor shall review the construction site with the Resident Project Representative to make permanent record of such existing damage as cracks, malfunctioning utility equipment and fixtures, or other similar damage. This record shall serve as a basis for determination of subsequent damage to the structures and adjacent areas due to Contractor's operations. Any damage to these structures and adjacent areas not noted in original review record shall be reported immediately to Owner. Permanent record shall include photographs and/or video graphic recording.

C. Erosion Control: Erosion prevention and sediment control measures must be in place prior to commencement of Work. All erosion control shall be in compliance with the City of Franklin's Best Management Practices Stormwater Management Manual.

© 2012 City of Franklin, Tennessee. All rights reserved.

D. Fire Precautions: Fire or use of any fire- or explosion- producing tools or equipment will be permitted on the premises only when the required permits have been obtained.

E. Manufacturers Qualifications: The manufacturers of all materials and equipment used must be approved by the Owner and regularly engaged in the manufacture of the particular material or equipment for the use and service to which it will be subjected.

F. Compliance with state and local laws: Comply with all applicable requirements of state and local laws and ordinances to the extent that such requirements do not conflict with federal laws or regulations.

G. Protection of public and private property: The Contractor shall be responsible for preservation of and shall take special care in working areas to protect public and private property. The Contractor shall replace or repair at his own expense any damaged water pipes, power and communication lines, or other public utilities, roads, curbs, gutters, sidewalks, drain pipes, drainage ditches, all properties and fixtures (both permanent and temporary), and all plantings, including grass or sod on the site of the Work. Leave the site in original or better condition after all cleanup has been done.

H. Markers: Preserve all surveyed and privately owned markers and monuments; do not remove or disturb any such markers without prior approval from the owner of the marker. Any removal and replacement of such markers shall be at the expense of the Contractor.

I. Pavement repair and/or replacement: Whenever existing asphalt is removed, restore traffic over the disturbed area as quickly as possible by backfilling with at least 12 inches of compacted Class A, Grade D crushed stone to within 2 inches of the existing surface and then applying a 2 inch layer of cold mix. Add material and otherwise maintain such surface until the permanent pavement is restored by the Contractor or until acceptance by the Owner. All roadway construction shall be in compliance with the Franklin Transportation and Street Technical Standards.

J. Department of Transportation Permits: For COF-funded projects, the Owner will secure any permits and provide bond as required by any federal, state, and local transportation department for the installation of permanent facilities on highway rights-of-way. For privately-funded projects, the Contractor must obtain a street cutting permit and bore permit from the Owner, if applicable. All such Work shall be coordinated with and be subject to the approval of said transportation department and Owner. The Contractor shall be responsible for permits and bonding for Work not provided for on the Drawings.

K. Approved Chemicals: All chemicals used during project construction or furnished for project operation, whether herbicide, pesticide, disinfectant, polymer, reactant, or of other classification, must show approval of either EPA or USDA. The use of all such chemicals and the disposal of residues shall be in strict conformance with manufacturer's instructions. Material Safety Data Sheets (MSDS) must be available on site for inspection. All chemicals shall be transported and stored in original containers.

L. Catalog Data for Owners: Provide duplicate complete, bound sets of a compilation of catalog data of each manufactured item of mechanical and electrical equipment used in the Work, for transmittal to the Owner prior to acceptance. Include descriptive data and printed installation, operating, and maintenance instructions (including a parts list for each item of equipment). Provide a complete double index as follows:

© 2012 City of Franklin, Tennessee. All rights reserved.

1. List the products alphabetically by name.
2. List alphabetically the names of manufacturers whose products have been incorporated in the Work, together with their addresses and the names and addresses of the local sales representative.

M. Installation, Testing and Guarantee: Install all materials and equipment exactly in accordance with the manufacturer's recommendations. The completely installed system shall be guaranteed against any and all defects of manufacture, materials, workmanship, or installation for a period of one year from the date of acceptance by the Owner.

N. Operation and Maintenance of the Systems and Instruction to Owner: Where the specifications for equipment require that a factory service representative provide operation and maintenance instruction to the Owner for that equipment, this service shall be performed by prior arrangement with the Owner after and in addition to the manufacturer's instructions to the Contractor for installation and start-up. The individual performing the instructions to the Owner is to be trained and/or certified by the manufacturer as its authorized operation, maintenance, and service specialist. If the said specialist is not a regular, full-time employee of the manufacturer, the specialist's qualifications shall be submitted to the Owner for review and approval prior to scheduling the site visit for instructions to the Owner.

O. Drawings of Record: Provide and keep up-to-date a complete record set of drawings, which shall be corrected daily to show every change. Keep this set of prints at the job site, and use only as a record set. This shall not be construed as authorization for the Contractor to make changes in the approved layout without definite instructions in each case. Turn the set over to the Owner upon Final Completion of the project. Record drawings must be submitted to and approved by the Owner prior to acceptance of the project. Refer to Division 01 Section "Project Record Documents" for additional information.

P. Preservation of Existing Vegetation: Take reasonable care during construction to avoid damage to vegetation. Where the area to be excavated is occupied by trees, brush, or other uncultivated vegetable growth, clear such growth from the area, and dispose of it in a manner satisfactory to the Owner. Leave undisturbed any trees, cultivated shrubs, flowers, etc., situated within public right-of-ways and/or easements through private property but not located directly within excavation limits. Take special precautions (including the provision of barricades and the temporary tying back of shrubbery and tree branches) for the protection and preservation of such objects throughout all stages of construction; the Contractor will be held liable for any damage that may result to said objects from excavation or construction operations. Refer to the COF Zoning Ordinance for Tree Protection Standards and Tree Removal Permit requirements.

Q. Existing Utilities: The Contractor shall notify Tennessee One-Call, the City of Franklin Water Management Department, and the owner of all other underground utilities no less than 3 business days or 72 hours in advance of excavation and/or proposed utility interruption. The Contractor is responsible for locating all existing utilities prior to construction and shall carefully protect from damage all utilities in the vicinity of the Work at all times. The Contractor shall be responsible for repairing any utilities that were properly located and marked. If it is necessary to repair, remove, and/or replace any such utility in order to complete the Work properly, do so in compliance with the rules, regulations, and approval of the particular utility involved. Any such Work shall be considered incidental to the construction or repairs of utility lines, and no additional payment will be allowed therefore.

© 2012 City of Franklin, Tennessee. All rights reserved.

Existing utilities shall remain in service at all times during construction. Contractor shall provide any temporary piping necessary to maintain utility service to existing customers.

R. Contractor shall comply with the requirements of the Manual on Uniform Traffic Control Devices published by the U.S. Department of Transportation Federal Highway Administration in supplying adequate signage, flagging, personnel, etc. for the entire project. The Contractor shall be responsible for the placement and removal of all signage. Submit a traffic control plan to the authority having jurisdiction.

S. The Contractor shall maintain an acceptable flow of traffic through construction areas. If a roadway must be closed in order to construct the Work, the Contractor shall notify, at a minimum, the Franklin Police Emergency Communications, Williamson County Emergency Operations Center, City of Franklin Traffic Operations Center, local school superintendent(s), and local U.S. Postal Service office(s) at least two days prior to roadway closure. If lanes must be closed in order to construct the Work, the Contractor shall notify the City of Franklin Traffic Operations Center at least two days prior to lane closure.

T. Work in Rights-of-Way:
   1. The Contractor shall notify the authorities having jurisdiction prior to entering and working in rights-of-way and shall be responsible for all damages resulting from said Work and for satisfying the requirements of said authorities.
   2. The Contractor shall maintain a suitable and safe condition throughout the right-of-way affected by the Work and provide detours as necessary for public and private traffic.
   3. Materials excavated in rights-of-way shall be hauled to a disposal site immediately and shall not be stockpiled in right-of-way.

U. Inspection of Work: The Contractor shall provide full access to the project site at all times for inspection and observation of Work by the Owner, Engineer, and agents of any local, state, or federal agency having jurisdiction.

V. Flood Insurance: The Contractor is required to carry flood insurance for Work which is located in designated flood hazard areas unless insurance is not available.

PART 2 - PRODUCTS (Not Used)

PART 3 - EXECUTION

3.1 OPERATION OF EXISTING UTILITIES

A. The Work shall be performed so as to cause minimum interference or interruption with the normal operation of the existing utilities. The Contractor shall plan and conduct construction sequencing operations to avoid disturbing existing utilities and equipment, except as may be provided or approved by the Owner.

END OF SECTION

© 2012 City of Franklin, Tennessee. All rights reserved.

PART 1 - GENERAL

1.1 RELATED DOCUMENTS

A. Drawings and general provisions of the Contract, including General and Supplementary Conditions and other Division 01 Specification Sections, apply to this Section.

1.2 SUMMARY

A. This Section includes administrative and procedural requirements for measurement and payment for COF-funded projects.

B. Measurement for payment on a unit price basis shall be as described herein. Payment for each item installed shall be made according to the unit price bid, as listed on the Bid Form. Only those items appearing on the Bid Form will be considered for payment on a unit price basis. In the event there are discrepancies between the BID form and the Schedule of Pay Items the Bid form will govern.

C. For work items included in the technical specifications and not listed herein, such work shall be considered part of or incidental to its related work.

D. Pay items for the Work for which contract lump sum payment will be made are listed on the Bid Form and briefly described herein. All costs for items of Work, which are not specifically mentioned to be included in a particular lump sum or unit price payment item, shall be considered incidental to the pay items and the cost of such shall be included in the listed lump sum item most closely associated with the Work involved. The lump sum price and payment made for each item listed shall constitute full compensation for furnishing all labor, materials, machinery, equipment, tools, apparatus, service, and other necessary supplies and performing any associated Contractor quality control, environmental protection, meeting safety requirements, tests and reports, and for performing all Work required for which separate payment is not otherwise provided.

E. When actual field conditions differ from assumed design conditions and result in a reduction in materials, equipment, and appurtenances to be installed, a negative adjustment will be made to the Contract. If items are provided on the bid form these items will be used for adjustment, otherwise, the Contractor shall provide costs for a Change Order.

F. The Contractor shall furnish all necessary labor, materials, machinery, equipment, tools, apparatus, service, and other necessary supplies and perform all Work shown on the Drawings and/or described in the Specifications at the price listed on the Bid Form. The Work shall be complete-in-place and ready for operation.

G. The Contractor has become thoroughly familiar with the terms and conditions of the Bidding Documents and with local conditions affecting the performance and costs of the Work at the place where the Work is to be completed, and has fully inspected the site in all particulars informing himself fully regarding all conditions pertaining to the Work site.

© 2012 City of Franklin, Tennessee. All rights reserved.

1.3 SCHEDULE OF PAY ITEMS

A. Section 01 5000 – Temporary Facilities and Controls: Payment for mobilization of the Contractor onsite ready to begin construction per the Contract documents shall be made at the lump sum price listed on the Bid Form. The lump sum payment shall be made as a percentage based on site specific requirements of the project. Any demobilization occurring during the duration of the Project will not qualify for payment.

B. Section 03 3000 – Cast-in-Place Concrete:
   1. Cast-in-Place (4000 psi) Concrete is a pay item when used in conjunction with vaults and water tank foundations. Payment for this work when used shall be expressed in cubic feet and be considered as full compensation for this item including all labor, materials, and equipment required to complete the item in accordance with the Bid Documents.
   2. Cast-in-Place (3500 psi) Concrete is a pay item when used in conjunction with concrete pump station slabs. Payment for this work when used shall be expressed in cubic feet and be considered as full compensation for this item including all labor, materials, and equipment required to complete the item in accordance with the Bid Documents.
   3. Cast-in-Place (3000 psi) Concrete is a pay item when used in conjunction with concrete encasement, concrete caps, and concrete anchors for water lines as well as concrete sidewalks and concrete curb and gutters. Payment for this work when used shall be expressed in linear feet except for the use of concrete sidewalk. Payment for concrete sidewalk shall be expressed in square yards. Payment shall be considered as full compensation for this item including all labor, materials, and equipment required to complete the item in accordance with the Bid Documents.
   4. Cast-in-Place Concrete is not a pay item when used in conjunction with concrete thrust blocks.

C. Section 31 0000 – Earthwork:
   1. Earthwork is not a pay item. All earthwork and excavation related to utility lines and appurtenances shall be unclassified.
   2. Rip Rap is a pay item. Payment for rip rap shall be unit price as specified on the Bid Form. Such payment shall include compensation for all labor, materials, and equipment necessary to complete the work as directed by the Owner or Resident Project Representative.
   3. Crushed Stone Refill: If ordered by the Engineer, measurement of crushed stone refill made for the construction shall be computed from the formula: "trench depth" x "trench width" x "trench length" = allowable volume for payment expressed in cubic yards. Each dimension shall be as defined below:
      a. "Trench depth" for refill shall equal the vertical centerline depth from a point 6 inches below the pipe installed to the bottom of the trench ordered by the Engineer below the aforesaid limit.
      b. "Trench width" shall be as listed in the following table: Pipe

Size	TrenchWidth
12" pipe & smaller	2.0 feet
16" & 18" pipe	2.5 feet
20" pipe	3.0 feet
24" pipe	3.5 feet
30" pipe	4.0 feet
36" pipe	4.5 feet

© 2012 City of Franklin, Tennessee. All rights reserved.

c. "Trench length" shall equal the actual horizontal measurement along the centerline of the trench less the allowable horizontal dimensions of valve boxes and other appurtenances as specified below:
   1) Where use of crushed stone refill is directed by the Engineer, it shall be paid per cubic yard of refill placed. Gravel refill placed at the discretion of the Contractor and not at the direction of the Engineer will not be paid for.
   2) The crushed stone bedding, six (6) inches below the pipe and gravel backfilling to eight (8) above the pipe shall <u>not</u> be measured for payment under this unit of work, but shall be merged in the unit prices for other units of work of this Contract; and no separate payment shall be allowed therefore.

D. Section 31 2319 – Dewatering: Dewatering is not a pay item.

E. Erosion and Sediment Control: Payment for this work shall be paid for as specified on the Bid Form and shall be considered as full compensation for this item, including all administrative and construction labor, installation, maintenance and removal of materials, equipment, record keeping, and other administrative work associated with the Stormwater Pollution Prevention Plan (SWPPP) required to complete the item in accordance with the Bidding Documents.

F. Section 31 5000 – Excavation Support and Protection: Excavation support and protection is not a pay item.

G. Final Pavement Repair: Final Pavement Repair is a pay item. Payment for this work shall be as specified on the Bid Form and shall be considered full compensation for the work including all labor, materials, and equipment required to complete the items in accordance with the Bidding Documents. The items listed on the Bid Form include Tennessee Department of Transportation item numbers for reference to the latest Tennessee Department of Transportation Standard Specifications for Road and Bridge Construction. Payment of items listed on the Bid Form shall be accordance with the Method of Measurement and Basis of Payment listed in the Tennessee Department of Transportation Standard Specifications for Road and Bridge Construction.

H. Section 32 3113 – Chain Link Fences and Gates: Chain-link fences and gates are a pay item. Payment for this work shall be made as linear feet and be considered as full compensation for this item, including all labor, materials, and equipment required to complete the item in accordance with the Bidding Documents.

I. Section 32 9219 – Final Seeding: Seeding, mulching, planting, fertilizing, and other work required, including all labor, materials, and equipment, is a pay item unless otherwise specified on the Bid Form.

J. Section 33 0131 – Rehabilitation of Sewer Utilities: Rehabilitation of sewer utilities is a pay item. Payment for this work shall be as specified on the Bid Form and be considered as full compensation for this item, including all labor, materials, and equipment required to complete the item in accordance with the Bidding Documents.

K. Section 33 0133 – Rehabilitation of Manholes: Rehabilitation of manholes is a pay item. Payment for this work shall be as specified on the Bid Form and be considered as full compensation for this item, including all labor, materials, and equipment required to complete the item in accordance with the Bidding Documents.

© 2012 City of Franklin, Tennessee. All rights reserved.

L. Section 33 0523 – Trenchless Installation of Utilities: Trenchless installation of utilities is a pay item. Payment for this work shall be as specified on the Bid Form and be considered as full compensation for this item, including all labor, materials, and equipment required to complete the item in accordance with the Bidding Documents. The quantities of trenchless installation of utility lines for which payment shall be made will be expressed in linear feet for each size and material type of pipe in terms of horizontal lengths of pipe installed in place, measured along the center line.

1. Bore and Jack: Boring and jacking, including all work necessary for the installation and testing of the casing and carrier pipe, casing spacers and end seals, shall be measured for payment by the linear foot of casing pipe installed or by lump sum as may be indicated on the Bid Form. No additional payment for the carrier pipe under other bid items will be made.
2. Tunnel: Tunneling shall be a pay item and measured for payment by the linear foot. Tunneling performed where Boring and Jacking has been proposed will be measured and paid as Boring and Jacking. Where specifically indicated on the Bid Form, tunneling, including all work necessary for the complete installation and testing of the tunnel liner plate and carrier pipe, grouting, casing spacers, strapping, masonry bulkheads, backfill of the tunnel, etc. shall be measured for payment by the linear foot or by lump sum as may be indicated on the Bid Form. No additional payment for the carrier pipe under other bid items will be made.
3. Directional Drilling: Directional Drilling including all work necessary for the installation of the pilot bore and testing of the pipe shall be measured for payment by the linear foot or by lump sum as may be indicated on the Bid Form.
4. Microtunneling: Microtunneling including all work necessary for the installation and testing of the pipe shall be measured for payment by the linear foot or by lump sum as may be indicated on the Bid Form.
5. Pipe Ramming: Pipe Ramming including all work necessary for the installation and testing of the casing and carrier pipe shall be measured for payment by the linear foot or by lump sum as may be indicated on the Bid Form.
6. Pipe Bursting: Pipe Bursting including all work necessary for the installation and testing shall be measured for payment by the linear foot or by lump sum as may be indicated on the Bid Form.

M. Section 33 1100 – Water Utility Distribution Piping: Water utility distribution piping is a pay item. Payment for this work shall be as specified on the Bid Form and be considered as full compensation for this item, including all labor, materials, and equipment required to complete the item in accordance with the Bidding Documents.

1. Water Line: The quantities of water lines for which payment shall be made will be expressed in linear feet for each size and material type of pipe in terms of horizontal lengths of pipe installed in place measured along the centerline with no deduction for valves or fittings. Such payment shall include full compensation for the furnishing and installation of pipe, jointing materials, survey and layout, clearing, grubbing, unclassified excavation, bedding, backfill, reaction blocking, clean-up, seeding, testing, flushing, disinfection and bacteriological sampling and all other work necessary to complete the work.
2. Fittings: Quantities of fittings shall be paid for at the weight of each fitting. The cost of glands and/or restraint devices shall be included in the cost per pound of fitting it is bolted to. Weights shall be based on the approved submittals for fittings. Such payment shall be full compensation for the furnishing and installation of fittings. No separate payment shall be made for nuts, bolts, glands, or restraint devices.

© 2012 City of Franklin, Tennessee. All rights reserved.

3. Water Service Lines: Quantities of water service lines for which payment shall be considered shall be expressed in linear feet for each size and material type of pipe in terms of horizontal lengths of pipe installed in place measured along the centerline with no deduction for valves or fittings. Such payment shall be full compensation for the furnishing and installation of pipe, jointing materials, survey and layout, clearing, grubbing, unclassified excavation, bedding, backfill, reaction blocking, clean-up, seeding, testing, flushing, disinfection and bacteriological sampling and all other work necessary to complete the work.
4. Connection to Existing Water Line: Payment for connection to existing water lines of the various sizes and types shall be per each connection made. Such payment shall include compensation for furnishing and installing the restraint devices necessary to complete the connection, backfilling, testing, disinfection, surface restoration (except Final Pavement replacement), and other labor and equipment necessary to complete the work. Payment shall include the use of backflow prevention devices as required by the Owner.
5. Cut & Cap / Plug Existing Line: Payment for plugging / capping existing line of the various sizes and types shall be per each. Such payment shall include compensation for furnishing and installing all fittings required that are not included separately on the bid form.

N. Section 33 1216 – Valves: Valves are a pay item. Payment for this work shall be per each assembly for each size and type. Such payment shall be full compensation for furnishing and installation of valve, valve box (including box adjustment), valve box collar, valve marker, gearing, coatings, nut operator extensions, appurtenances, excavation, bedding, backfilling, blocking and all labor and equipment necessary to complete the work.

1. Air Release Assembly & Box: The quantities of the Air Release Assembly and Box for which payment shall be considered shall be expressed per each size and type of assembly. Such payment shall be full compensation for the furnishing and installing the valve, valve box, or vault as required; excavation, bedding, backfill, bypasses (if required), interior piping, service tap, painting, blocking, clean-up and start-up, and all other work necessary to complete the item.
2. Tapping Sleeve Valve & Box: Quantities of Tapping Sleeve Valve and Box for which payment shall be considered shall be expressed per each size and material type of tapping sleeve and valve. Such payment shall be full compensation for the furnishing and installing the tapping sleeve and valve including excavation, blocking and restraint, tap of the existing line, bedding, backfill, valve box and box adjustments, and all other work necessary to complete the item.
3. Combination Air Valve Assembly: The quantities of combination air valve assemblies for which payment shall be considered shall be expressed per each size and type. Such payment shall be full compensation or furnishing and installing the valve, valve box, or vault as required; excavation, bedding, backfill, painting, blocking, clean-up and start-up, and all other work necessary to complete the item.

O. Section 33 1219 – Hydrants: Hydrants are a pay item. Payment for this work shall be per each assembly for each size and type. Such payment shall be full compensation for furnishing and installation of the hydrant lead (from, but not including the water main tee), reducers (as required), hydrant assembly, hydrant lead gate valve, valve box (including box adjustment), valve box collar, coatings, valve nut operator extensions, hydrant extension, rodding or other restraining devices, appurtenances (such as interior and exterior coatings, glands, gaskets, bolts, etc), unclassified excavation, bedding, backfilling, blocking, testing, and all labor and equipment necessary to complete the work.

© 2012 City of Franklin, Tennessee. All rights reserved.

P. Section 33 1233 – Water Service Assemblies: Water service assemblies are a pay item. Payment for this work shall be as specified on the Bid Form and be considered as full compensation for furnishing and installing material needed for complete installation.

1. Double Check Valve Assembly: The quantities of the Double Check Valve Assembly and box for which payment shall be considered shall be expressed per each size and type of assembly. Such payment shall be full compensation for the furnishing and installing the valve, valve box, or vault as required; excavation, bedding, backfill, bypasses (if required), interior piping, service tap, painting, blocking, clean-up and start-up, and all other work necessary to complete the item.
2. Reduced Pressure Backflow Preventer: Payment for this work shall be per each assembly for each size and type. Such payment shall be for furnishing and installation of the reduced pressure backflow preventer and all labor and equipment necessary to complete the work.
3. Meter Assembly: Meter boxes and valves are pay items. Payment for this work shall be as specified on the Bid Form and be considered as full compensation for this item, including all labor, materials, and equipment required to complete the item in accordance with the Bidding Documents. Water meters are not included in this pay item.
4. Disconnect/Reconnect Water Service: Payment for this work shall be per each assembly for each size and type. Such payment shall be for the disconnection from the old water main to the reconnection of the water service to the new water main and include all labor and equipment necessary to complete the work.

Q. Section 33 1234 – Reclaimed Service Assemblies: Reclaimed service assemblies are a pay item. Payment for this work shall be as specified on the Bid Form and be considered as full compensation for furnishing and installing material needed for complete installation.

1. Reconnect/Relocate Reclaimed Water Service: Payment for this work shall be per each assembly for each size and type. Such payment shall be for the reconnection from the old water main to the relocation of the water service to the new water main and include all labor and equipment necessary to complete the work.
2. Service Assembly & Box: Service Assembly and Box is a pay item. Payment for this work shall be as specified on the Bid Form and be considered as full compensation for this item, including all labor, materials, and equipment required to complete the item in accordance with the Bidding Documents. Water meters are not included in this pay item.

R. Section 33 3113 – Sanitary Sewer (Gravity): Sanitary sewers (gravity) are a pay item. Payment for this work shall be as specified on the Bid Form and be considered as full compensation for this item, including all labor, materials, and equipment required to complete the item in accordance with the Bidding Documents.

1. Sanitary Sewers: The quantities of sewer for which payment shall be made will be expressed in linear feet for each size and material type of pipe in terms of horizontal lengths of pipe installed in place measured along the centerline with no deduction for manholes. Such payment shall include full compensation for furnishing and installation of pipe, service reconnections, concrete anchors, and appurtenances (such as interior and exterior coatings, glands, gaskets, bolts, etc.), including all sewer flow control (bypass pumping), excavation, trenching, bedding, laying, jointing, connection to new manholes, testing, backfilling, surface restoration (except final pavement replacement), and all labor and equipment necessary to complete the work.
2. Connection to Existing Manholes: Quantities of connections to existing manholes for which payment shall be made shall be expressed per each connection made. Such

© 2012 City of Franklin, Tennessee. All rights reserved.

payment shall be full compensation for all labor, materials, and equipment required for bypass pumping (sewer flow control), excavation, coring of the existing manhole wall, installation of pipe/manhole seal, installation of the pipe, re-forming the bench and invert, bedding, backfilling, and surface restoration (except final pavement restoration). All concrete pipe, plugs, sealant, and other materials required to complete the work shall be considered part of this pay item.

3. Removal and proper disposal of existing gravity sewer pipe, including excavation, plugging of manholes to remain in service or abandoned in place, backfilling, and surface restoration (except final pavement restoration) is not a separate pay item unless specified on the bid form.
4. Low Pressure Collection Line: The quantities of sewer for which payment shall be made will be expressed in linear feet for each size and material type of pipe in terms of horizontal lengths of pipe installed in place measured along the centerline with no deduction for manholes. Such payment shall include full compensation for furnishing and installation of pipe, service reconnections, concrete anchors, and appurtenances (such as interior and exterior coatings, glands, gaskets, bolts, etc.), including all sewer flow control (bypass pumping), excavation, trenching, bedding, laying, jointing, connection to new manholes, testing, backfilling, surface restoration (except final pavement replacement), and all labor and equipment necessary to complete the work.
5. Low Pressure Service Line: The quantities of low pressure service lines for which payment shall be made will be expressed in linear feet for each size and material type of pipe in terms of horizontal lengths of pipe installed in place measured along centerline.
6. Lateral Service Connection: Payment for sewer lateral connection replacement shall be per each connection as designated on the Bid Form, complete in place. The payment shall constitute full compensation for all necessary materials and work including all fittings, cleanouts installed at the property line, excavation, bedding, backfilling, surface replacement except in paved areas, flexible couplings, miscellaneous pipe, and all appurtenances.

S. Section 33 3115 – Sewer Flow Control: Sewer flow control is not a pay item.

T. Section 33 3130 – Sewer Television Inspection: Sewer television inspection is a pay item. Payment for this work shall be made as linear feet and be considered as full compensation for this item.

U. Section 33 3213 – Packaged Sewage Pumping Stations: Packaged sewage pumping stations are a pay item. Payment for this work shall be as specified on the Bid Form and be considered as full compensation for this item, including all labor, materials, and equipment required to complete the item in accordance with the Bidding Documents.

1. Payment for furnishing and installation of Wastewater Pumping Station shall be made at the lump sum price as designated on the Bid Form, complete in place. The payment shall constitute full compensation for all necessary materials and work including submersible grinder pumps, pump removal system, float switches, controls, control panel, SCADA, piping, quick disconnect, valves, valve manhole, fittings, concrete wetwell including exterior and interior coating, excavation, backfill, crushed stone, dewatering, electrical work, wiring, electrical cable, fencing, site development, and all appurtenances. Any materials or work described in the Specifications or Drawings or necessary to construct a complete and operable facility shall be considered included in the Bid Form.

© 2012 City of Franklin, Tennessee. All rights reserved.

V. Section 33 3300 – Reclaimed Water Distribution Piping: Reclaimed water distribution piping is a pay item. Payment for this work shall be as specified on the Bid Form and be considered as full compensation for this item, including all labor, materials, and equipment required to complete the item in accordance with the Bidding Documents.

1. Reclaimed Water Line: The quantities of reclaimed water lines for which payment shall be made will be expressed in linear feet for each size and material type of pipe in terms of horizontal lengths of pipe installed in place measured along the centerline with no deduction for valves or fittings. Such payment shall include full compensation for the furnishing and installation of pipe, jointing materials, survey and layout, clearing, grubbing, unclassified excavation, bedding, backfill, reaction blocking, clean-up, seeding, testing, flushing, disinfection and bacteriological sampling and all other work necessary to complete the work.
2. Fittings: Quantities of fittings shall be paid for at the weight of each fitting including glands and/or restraint devices described in pounds. Weights shall be based on the approved submittals for fittings. Such payment shall be full compensation for the furnishing and installation of fittings.
3. Reclaimed Water Service Lines: Quantities of reclaimed water service lines for which payment shall be considered shall be expressed in linear feet for each size and material type of pipe in terms of horizontal lengths of pipe installed in place measured along the centerline with no deduction for valves or fittings. Such payment shall be full compensation for the furnishing and installation of pipe, jointing materials, survey and layout, clearing, grubbing, unclassified excavation, bedding, backfill, reaction blocking, clean-up, seeding, testing, flushing, disinfection and bacteriological sampling and all other work necessary to complete the work.
4. Connection to Existing Reclaimed Water Line: Payment for connection to existing reclaimed water lines of the various sizes and types shall be per each connection made. Such payment shall include compensation for furnishing and installing the fittings and restraint devices necessary to complete the connection, backfilling, testing, disinfection, surface restoration (except Final Pavement replacement), and other labor and equipment necessary to complete the work. Payment shall include the use of backflow prevention devices as required by the Owner.
5. Cut & Cap / Plug Existing Line: Payment for plugging / capping existing line of the various sizes and types shall be per each. Such payment shall include compensation for furnishing and installing all fittings required that are not included separately on the bid form.

W. Section 33 3400 – Sewage Force Main: Sewage force main is a pay item. Payment for this work shall be as specified on the Bid Form and be considered as full compensation for this item, including all labor, materials, and equipment required to complete the item in accordance with the Bidding Documents. The quantities of pipe for which payment will be allowed shall be expressed in linear feet for each size and type of pipe in terms of the horizontal lengths of pipe installed in place as measured along the center line with no deductions for fittings. Payment also includes the furnishing and installing of pipe at design grade, jointing materials (including excavation and backfill) tracer wire, and all other work necessary for and incidental to completion of the Work. No additional payment will be considered for force main fittings.

X. Section 33 3913 – Manholes: Manholes are a pay item. Payment for this work shall be as specified on the Bid Form and be considered as full compensation for this item, including all labor, materials, and equipment required to complete the item in accordance with the Bidding Documents. Payment for manholes shall be made for each type of manhole up to 6 feet in

© 2012 City of Franklin, Tennessee. All rights reserved.

depth including a traffic type casting. Additional payment shall be made for vertical sidewall beyond 6 feet in depth. Manhole depth shall be measured from finished casting elevation to invert of outlet pipe and shall include a standard casting, manhole steps, excavation, all other items of work necessary and equipment required to complete the item. Additional payment shall be made for watertight castings and manhole vents.

1. Doghouse Manholes: Payment for furnishing and installation of doghouse manholes shall be expressed per each doghouse manhole for each size, type, and depth complete-in-place with the exception of drop assemblies.
2. Manhole Vents: Payment for vent assemblies shall be measured per each installed and shall be paid for the Contract unit price per each.
3. Watertight Manhole & Frame and Cover: Payment for new watertight manhole frame and cover shall be made at the unit price per each as designated on the Bid Form, complete-in-place. The payment shall constitute full compensation for all necessary materials and work including placing stainless steel anchor bolts, washers and nuts; stainless steel plates and bolts on each manhole base, riser, and cone to anchor structure together from base to cover, and all appurtenances.
4. Manhole Frame and Cover (Non Watertight): Payment for new manhole frame and cover shall be made at the unit price per each as designated on the Bid From, complete-in-place. The payment shall constitute full compensation for all necessary materials and work including placing stainless steel anchor bolts on the frame anchoring it to the cone of the manhole.
5. Drop Manhole Assembly: Payment for manhole outside drop assemblies shall be expressed per each assembly installed complete-in-place and shall include all excavation, bedding, concrete, pipe, fittings, backfilling, surface restoration (except final pavement replacement), and appurtenances necessary for an operable assembly.

PART 2 - PRODUCTS (Not Used)

PART 3 - EXECUTION (Not Used)

END OF SECTION

© 2012 City of Franklin, Tennessee. All rights reserved.

PART 1 - GENERAL

1.1 RELATED DOCUMENTS

A. Drawings and general provisions of the Contract, including General and Supplementary Conditions and other Division 01 Specification Sections, apply to this Section.

1.2 SUMMARY

A. This Section specifies administrative and procedural requirements for handling and processing Contract modifications.

B. Related Sections include the following:
   1. Division 01 Section "Measurement and Payment" for administrative requirements for unit pricing.
   2. Division 01 Section "Payment Procedures" for administrative requirements for preparation and processing payments for changes in the work.
   3. Division 01 Section "Product Requirements" for selection of products for changes in the work.

1.3 MINOR CHANGES IN THE WORK

A. Owner will issue a field order authorizing Minor Changes in the Work, not involving adjustment to the Contract Sum or the Contract Time.

1.4 PROPOSAL REQUESTS

A. Owner-Initiated Proposal Requests: Owner will issue a detailed description of proposed changes in the Work that may require adjustment to the Contract Sum or the Contract Time. If necessary, the description will include supplemental or revised Drawings and Specifications.
   1. Proposal Requests issued by Owner are for information only. Do not consider them instructions either to stop work in progress or to execute the proposed change.
   2. Within 10 days after receipt of Proposal Request, submit a quotation estimating cost adjustments to the Contract Sum and the Contract Time necessary to execute the change.
      a. Include a list of quantities of products required or eliminated and unit costs, with total amount of purchases and credits to be made. If requested, furnish survey data to substantiate quantities.
      b. Indicate applicable taxes, delivery charges, equipment rental, and amounts of trade discounts.
      c. Include an updated Contractor's Construction Schedule that indicates the effect of the change, including, but not limited to, changes in activity duration, start and finish times, and activity relationship.

B. Contractor-Initiated Proposals: If latent or unforeseen conditions require modifications to the Contract, Contractor may propose changes by submitting a request for a change to the Owner.
   1. Include a statement outlining reasons for the change and the effect of the change on the Work. Provide a complete description of the proposed change. Indicate the effect of the proposed change on the Contract Sum and the Contract Time.

© 2012 City of Franklin, Tennessee. All rights reserved.

2. Include a list of quantities of products required or eliminated and unit costs, with total amount of purchases and credits to be made. If requested, furnish survey data to substantiate quantities.
3. Indicate applicable taxes, delivery charges, equipment rental, and amounts of trade discounts.
4. Include an updated Contractor's Construction Schedule that indicates the effect of the change, including, but not limited to, changes in activity duration, start and finish times, and activity relationship.
5. Comply with requirements in Division 01 Section "Product Requirements" if the proposed change requires substitution of one product or system for product or system specified.

1.5 CONSTRUCTION CHANGE DIRECTIVES

A. In absence of total agreement on the terms of a Change Order, the Owner may prepare and issue a Construction Change Directive directing a change in the Work, for subsequent inclusion in a Change Order.
   1. Construction Change Directive will describe changes in the Work, and describe the method of determining any change in the Contract Sum or Contract Time, or both.
   2. Construction Change Directive will be signed by Owner.

B. Upon receipt of a Construction Change Directive, Contractor shall do the following:
   1. Promptly proceed with the change in the Work involved.
   2. Promptly advise the Owner of the Contractor's agreement or disagreement with the method, if any, provided in the Construction Change Directive for determining the proposed adjustment in the Contract Sum or Contract Time.

C. A Construction Change Directive signed by the Contractor indicates the agreement of the Contractor therewith, including adjustment in Contract Sum and Contract Time or the method for determining them.
   1. Such agreement shall be effective immediately and shall be recorded as a Change Order.
   2. If Contractor does not respond promptly or disagrees with the Construction Change Directive, he shall comply with General Conditions.

D. A Construction Change Directive shall be processed in compliance with requirements of the General Conditions.

1.6 DOCUMENTATION OF PROPOSALS AND CLAIMS

A. Support each quotation for a lump-sum proposal, and for each unit price which has not previously been established, with sufficient substantiating data to allow the Owner to evaluate the quotation.

B. On request provide additional data to support time and cost computations:
   1. Labor required.
   2. Equipment required.
   3. Products required:
      a. Recommended source of purchase and unit cost.
      b. Quantities required.
   4. Taxes, insurance and bonds.

© 2012 City of Franklin, Tennessee. All rights reserved.

5. Credit for work deleted from Contract, similarly documented.
6. Overhead and profit, for subcontractor and General Contractor separately.
7. Justification for any change in Contract Time.

C. Support each claim for additional costs, and for work done on a time-and-material/force account basis, with documentation as required for a lump-sum proposal, plus the following additional information:
   1. Name of the Owner's authorized agent who ordered the Work, and date of the order.
   2. Dates and hours work was performed, and by whom.
   3. Time record, summary of hours worked, and hourly rates paid.
   4. Receipts and invoices for:
      a. Equipment used, listing dates and times of use.
      b. Products used, listing of quantities.
      c. Subcontracts.
      d. Overhead and Profit, Taxes, Insurance.

D. Document requests for substitutions for Products as specified in Division 01 Section "Product Requirements".

E. Support each claim for additional Contract time with a detailed time impact analysis

F. All weather related Change Order Requests must be substantiated by NOAA data.

1.7 PREPARATION OF CHANGE ORDERS

A. Owner will prepare each Change Order to address specific issues unless mutually agreed to do otherwise by all parties.

B. Change Order will describe changes in the Work, both additions and deletions, with attachments of revised Contract Documents to define details of the change.

C. Change Order will provide an accounting of the adjustment in the Contract Sum and in the Contract Time.

1.8 LUMP-SUM/FIXED PRICE CHANGE ORDER

A. Content of Change Orders will be based on, either:
   1. Owner's Proposal Request and Contractor's responsive Proposal as mutually agreed between Owner and Contractor.
   2. Contractor's Proposal for a change, signed by the Contractor.

B. Owner will sign and date the Change Order as authorization for Contractor to proceed with changes, after Contractor has signed the Change Order.

1.9 TIME AND MATERIAL/FORCE ACCOUNT CHANGE ORDER/CONSTRUCTION CHANGE AUTHORIZATION

A. Owner will issue a Construction Change Directive directing Contractor to proceed with the changes.

© 2012 City of Franklin, Tennessee. All rights reserved.

B. Contractor shall submit daily itemized accounting and supporting data as provided in the Article "Documentation of Proposals and Claims" of this Section. At completion of the change, Contractor shall submit a complete itemized accounting of the change along with all supporting data.

C. Owner will determine the allowable cost of such work, as provided in General Conditions and Supplementary Conditions, and based on Contractor's submitted data.

D. Owner will sign and date the Change Order to establish the change in Contract Sum and in Contract Time.

E. Owner and Contractor will sign and date the Change Order to indicate their agreement therewith.

1.10 CORRELATION WITH CONTRACTOR'S SUBMITTALS

A. Periodically revise Schedule of Values and Request for Payment forms to record each change as a separate item of Work, and to record the adjusted Contract Sum.

B. Periodically revise the Construction Schedule to reflect each change in Contract Time.
   1. Revise sub-schedules to show changes for other items of Work affected by the changes.

C. Upon completion of Work under a Change Order, enter pertinent changes in Record Documents.

PART 2 - PRODUCTS (Not Used)

PART 3 - EXECUTION (Not Used)

END OF SECTION

© 2012 City of Franklin, Tennessee. All rights reserved.

PART 1 - GENERAL

1.1 RELATED DOCUMENTS

A. Drawings and general provisions of the Contract, including General and Supplementary Conditions and other Division 01 Specification Sections, apply to this Section.

1.2 SUMMARY

A. This Section specifies administrative and procedural requirements necessary to prepare and process Applications for Payment.

B. Related Sections include the following:
   1. Division 01 Section "Measurement and Payment" for administrative requirements governing use of unit prices.
   2. Division 01 Section "Contract Modification Procedures" for administrative procedures for handling changes to the Contract.

1.3 DEFINITIONS

A. Unit Price Schedule: An itemized list of additional work directives as the result of a Change Order. The schedule provides a unit cost for the identified work task.

B. Schedule of Values: A statement furnished by Contractor allocating portions of the Contract Sum to various portions of the Work and used as the basis for reviewing Contractor's Applications for Payment.

C. Stored Materials: Product values that may be claimed on an Application for Payment. Product invoices must be provided with Application for Payment to substantiate the value of the Stored Materials claim. Stored Materials are associated with portions of the work that are represented by Bid Form or Schedule of Values line items and will be limited on the Application for Payment to a maximum of 30 percent of the total amount bid. Deviations to this standard shall be as approved by the Owner. The Stored Materials value will be reduced on each Application for Payment based on the total contract value complete to date of said Application for Payment. The Stored Materials value will be reduced to zero upon original Substantial Completion date.

1.4 UNIT PRICE SCHEDULE

A. General:
   1. It is recognized that unit price items are listed in the Bid Form, and that the Owner-Contractor Agreement records acceptance or rejection of each unit price, either as bid or as otherwise agreed upon by the date of the Agreement.
   2. It is recognized that the utilization of a unit price schedule is solely by means of Change Order as specified in General and Supplementary Conditions, and that established unit prices contain total costs as defined therein, and included each entity's margins for overhead and profit.

B. Prepare Schedule of established Unit Prices to show generic name, unit of measure, price per unit, related specification sections, subcontractor (if any) assigned to the work so named, comments applicable to the Agreement terms which established it.

© 2012 City of Franklin, Tennessee. All rights reserved.

1. Indicate whether add-prices are established to be different from deduct-prices.

C. Owner reserves the right to reject the Contractor's measure of work-in-place which involves the use of established unit prices, and at Owner's expense to have the work measured by independent surveyor acceptable to Contractor.

1.5 APPLICATIONS FOR PAYMENT

A. Each Application for Payment shall be consistent with previous applications and payments as certified by Owner and paid for by Owner.
   1. Initial Application for Payment, Application for Payment at time of Substantial Completion, and final Application for Payment have individual requirements.
   2. Each application for payment must be reviewed and approved by the Resident Project Representative prior to submittal to the Owner. The Owner will not review applications for payment that have not been approved by the Resident Project Representative and will return them without action.

B. Payment Application Times: The closing date for each progress payment shall be established at the pre-construction conference. The period covered by each Application for Payment starts on the day following the end of the preceding application period.

C. Payment Application Forms: Use Contractor's Application for Payment (EJCDC Document C-620), or equivalent approved form.

D. Application Preparation: Complete every entry on form. Notarize and execute by a person authorized to sign legal documents on behalf of Contractor. Owner will return incomplete applications without action.
   1. Entries shall match data on the Schedule of Values and Contractor's Construction Schedule. Use updated schedules if revisions were made.
   2. Include amounts of Change Orders and Construction Change Directives issued before last day of construction period covered by application.
   3. Include Stored Materials values, as applicable.

E. Transmittal: Submit 5 signed and notarized original copies of each Application for Payment to Owner by a method ensuring receipt.

F. Initial Application for Payment: Administrative actions and submittals that must precede or coincide with submittal of first Application for Payment include the following:
   1. List of subcontractors.
   2. Schedule of Values.
   3. Contractor's Construction Schedule (preliminary if not final).
   4. Products list.
   5. Schedule of unit prices.
   6. Submittals Schedule (preliminary if not final).
   7. List of Contractor's staff assignments.

G. Application for Payment at Substantial Completion: After issuing the Certificate of Substantial Completion, submit an Application for Payment showing 100 percent completion for portion of the Work claimed as substantially complete.
   1. Include documentation supporting claim that the Work is substantially complete and a statement showing an accounting of changes to the Contract Sum.

© 2012 City of Franklin, Tennessee. All rights reserved.

2. This application shall reflect Certificates of Partial Substantial Completion issued previously for Owner occupancy of designated portions of the Work.

H. Final Payment Application: Submit final Application for Payment with releases and supporting documentation not previously submitted and accepted, including, but not limited, to the following:
   1. Evidence of completion of Project closeout requirements.
   2. Insurance certificates for products and completed operations where required and proof that taxes, fees, and similar obligations were paid.
   3. Updated final statement, accounting for final changes to the Contract Sum.
   4. AIA Document G706, "Contractor's Affidavit of Payment of Debts and Claims."
   5. AIA Document G706A, "Contractor's Affidavit of Release of Liens."
   6. AIA Document G707, "Consent of Surety to Final Payment."
   7. Evidence that claims have been settled.
   8. Final, liquidated damages settlement statement.

PART 2 - PRODUCTS (Not Used)

PART 3 - EXECUTION (Not Used)

END OF SECTION

© 2012 City of Franklin, Tennessee. All rights reserved.

PART 1 - GENERAL

1.1 RELATED DOCUMENTS

A. Drawings and general provisions of the Contract, including General and Supplementary Conditions and other Division 01 Specification Sections, apply to this Section.

1.2 SUMMARY

A. This Section includes administrative provisions for coordinating construction operations on Project including, but not limited to, the following:
   1. Coordination Drawings.
   2. Administrative and supervisory personnel.
   3. Project meetings.
   4. Requests for Information (RFIs).

B. Each contractor shall participate in coordination requirements. Certain areas of responsibility will be assigned to a specific contractor.

C. Related Sections include the following:
   1. Division 01 Section "Execution" for procedures for coordinating general installation and field-engineering services, including establishment of benchmarks and control points.
   2. Division 01 Section "Closeout Procedures" for coordinating closeout of the Contract.

1.3 DEFINITIONS

A. RFI: Request from Contractor seeking interpretation or clarification of the Contract Documents.

1.4 COORDINATION

A. Coordination: Coordinate construction operations included in different Sections of the Specifications to ensure efficient and orderly installation of each part of the Work. Coordinate construction operations, included in different Sections, which depend on each other for proper installation, connection, and operation.
   1. Schedule construction operations in sequence required to obtain the best results where installation of one part of the Work depends on installation of other components, before or after its own installation.
   2. Make adequate provisions to accommodate items scheduled for later installation.
   3. Where availability of space is limited, coordinate installation of different components to ensure maximum performance and accessibility for required maintenance, service, and repair of all components, including mechanical and electrical.

B. Prepare memoranda for distribution to each party involved, outlining special procedures required for coordination. Include such items as required notices, reports, and list of attendees at meetings.
   1. Prepare similar memoranda for Owner and separate contractors if coordination of their Work is required.

© 2012 City of Franklin, Tennessee. All rights reserved.

C. Administrative Procedures: Coordinate scheduling and timing of required administrative procedures with other construction activities and activities of other contractors to avoid conflicts and to ensure orderly progress of the Work. Such administrative activities include, but are not limited to, the following:
   1. Preparation of Contractor's Construction Schedule.
   2. Preparation of the Schedule of Values.
   3. Installation and removal of temporary facilities and controls.
   4. Delivery and processing of submittals.
   5. Progress meetings.
   6. Preinstallation conferences.
   7. Project closeout activities.
   8. Startup and adjustment of systems.
   9. Project closeout activities.

D. Communication Procedures: The Owner and Contractor shall communicate with each other about matters related to the Contract, unless otherwise provided in the Contract Documents or when direct communications have been specially authorized. Communications by and with subcontractors and material suppliers shall be through the Contractor. Communications by and with separate contractors shall be through the Owner.

E. Conservation: Coordinate construction activities to ensure that operations are carried out with consideration given to conservation of energy, water, and materials.
   1. Salvage materials and equipment involved in performance of, but not actually incorporated into, the Work. Refer to other Sections for disposition of salvaged materials that are designated as Owner's property.

1.5 PROJECT MEETINGS

A. General: Schedule and conduct meetings and conferences at Project site, unless otherwise indicated.
   1. Attendees: Inform participants and others involved, and individuals whose presence is required, in writing seven working days prior to each meeting, of date and time of meeting. Notify Owner of scheduled meeting dates and times.
   2. Agenda: Prepare the meeting agenda. Distribute the agenda to all invited attendees.
   3. Minutes: Record significant discussions and agreements achieved. Distribute the meeting minutes to everyone concerned, within three days of the meeting.

B. Preconstruction Conference: Schedule a preconstruction conference before starting construction, at a time convenient to Owner and Engineer, but no later than 15 days after execution of the Agreement. Hold the conference at Project site or another convenient location. Conduct the meeting to review responsibilities and personnel assignments.
   1. Attendees: Authorized representatives of Owner, Engineer, and their consultants; Contractor and its superintendent; major subcontractors; suppliers; and other concerned parties shall attend the conference. All participants at the conference shall be familiar with Project and authorized to conclude matters relating to the Work.
   2. Agenda: Discuss items of significance that could affect progress, including the following:
      a. Tentative construction schedule.
      b. Phasing.
      c. Critical work sequencing and long-lead items.

© 2012 City of Franklin, Tennessee. All rights reserved.

d. Designation of key personnel and their duties.
e. Procedures for processing field decisions, Proposal Requests and Change Orders.
f. Procedures for RFIs.
g. Procedures for testing and inspecting.
h. Procedures for processing Applications for Payment.
i. Distribution of the Contract Documents.
j. Submittal procedures.
k. Procedures for Maintaining and Preparation of Record Documents.
l. Use of the premises.
m. Work restrictions.
n. Owner's occupancy requirements.
o. Responsibility for temporary facilities, utilities and controls.
p. Construction waste management and recycling.
q. Parking availability.
r. Office, work, and storage areas.
s. Equipment deliveries and priorities.
t. First aid.
u. Security.
v. Progress cleaning.
w. Working hours.

3. Minutes: Owner will record and distribute meeting minutes.

C. Progress Meetings: Conduct progress meetings at regular intervals. Coordinate dates of meetings with preparation of payment requests.

1. Attendees: In addition to representatives of Owner and Engineer, each Contractor, Subcontractor, supplier, and other entity concerned with current progress or involved in planning, coordination, or performance of future activities shall be represented at these meetings. All participants at the conference shall be familiar with Project and authorized to conclude matters relating to the Work.
2. Agenda: Review and correct or approve minutes of previous progress meeting. Review other items of significance that could affect progress. Include topics for discussion as appropriate to status of Project.
   a. Contractor's Construction Schedule: Review progress since the last meeting. Determine whether each activity is on time, ahead of schedule, or behind schedule, in relation to Contractor's Construction Schedule. Determine how construction behind schedule will be expedited; secure commitments from parties involved to do so. Discuss whether schedule revisions are required to ensure that current and subsequent activities will be completed within the Contract Time.
      1) Review schedule for next period.
   b. Review present and future needs of each entity present, including the following:
      1) Sequence of operations.
      2) Status of submittals.
      3) Deliveries.
      4) Access.
      5) Site utilization.
      6) Temporary facilities and controls.
      7) Work hours.
      8) Hazards and risks.
      9) Progress cleaning.
      10) Quality and work standards.

© 2012 City of Franklin, Tennessee. All rights reserved.

11) Status of correction of deficient items.
12) Field observations.
13) RFIs.
14) Status of proposal requests.
15) Pending changes.
16) Status of Change Orders.
17) Pending claims and disputes.
18) Documentation of information for payment requests.

3. Minutes: Owner will record and distribute the meeting minutes.
4. Reporting: Distribute minutes of the meeting to each party present and to parties who should have been present.
   a. Schedule Updating: Revise Contractor's Construction Schedule after each progress meeting where revisions to the schedule have been made or recognized. Issue revised schedule concurrently with the report of each meeting.

1.6 REQUESTS FOR INFORMATION (RFIs)

A. Procedure: Immediately on discovery of the need for information of the Contract Documents, and if not possible to request information at Project meeting, prepare and submit an RFI in the form specified.

1. RFIs shall originate with Contractor. RFIs submitted by entities other than Contractor will be returned with no response.
2. Coordinate and submit RFIs in a prompt manner so as to avoid delays in Contractor's work or work of subcontractors.

B. Submittal of an RFI constitutes representation that the Contractor requires additional information about the Contract Documents AFTER he has made careful study and comparison of the Contract Documents, field conditions, other Owner-provided information, Contractor-prepared coordination drawings, and prior project correspondence or documentation.

C. If upon evaluation of the RFI, the Owner finds that the requested information is contained in the Contract Documents or by other documents and/or methods as outlined in paragraph above, the Owner has the option to obtain reimbursement from the Contractor for costs incurred by the Owner for expenses made necessary in answering such requests.

D. Content of the RFI: Include a detailed, legible description of item needing information and the following:
1. Project name.
2. Date submitted to the Owner.
3. Name of Contractor.
4. Name of Engineer.
5. RFI number, numbered sequentially by the Contractor as they are submitted to the Owner or Engineer.
6. Specification Section number and title and related paragraphs, as appropriate.
7. Drawing number and detail references, as appropriate.
8. Discipline (Architecture, Structural, Mechanical, Electrical, etc.).
9. Field dimensions and conditions, as appropriate.

© 2012 City of Franklin, Tennessee. All rights reserved.

10. Contractor's suggested solution(s). If Contractor's solution(s) impact the Contract Time or the Contract Sum, Contractor shall state impact in the RFI.
11. Contractor's signature.
12. Attachments: Include drawings, descriptions, measurements, photos, Product Data, Shop Drawings, and other information necessary to fully describe items needing interpretation.
    a. Supplementary drawings prepared by Contractor shall include dimensions, thicknesses, structural grid references, and details of affected materials, assemblies, and attachments.
13. Date information required.

E. Hard-Copy RFIs: Form in Appendix D of the Specification Book.
1. Identify each page of attachments with the RFI number and sequential page number.

F. Owner's Action: Owner will review each RFI, determine action required, and return it. Allow five working days for Owner's response for each RFI. RFIs received after 2:00 p.m. local time will be considered as received the following working day.
1. If the date of response requested is less than five working days, the Owner will endeavor to respond when requested, however a failure to respond prior to the requested date shall not be the sole basis for any delay claims of time or money.
2. The following RFIs will be returned without action:
    a. Requests for approval of submittals.
    b. Requests for approval of substitutions.
    c. Requests for coordination information already indicated in the Contract Documents.
    d. Requests for adjustments in the Contract Time or the Contract Sum.
    e. Requests for interpretation of Owner's actions on submittals.
    f. Incomplete RFIs or RFIs with numerous errors.
3. Owner's action may include a request for additional information, in which case Owner's time for response will start again.
4. Owner's action on RFIs that may result in a change to the Contract Time or the Contract Sum may be eligible for Contractor to submit Change Proposal according to Division 01 Section "Contract Modification Procedures."
    a. If Contractor believes the RFI response warrants change in the Contract Time or the Contract Sum, notify Owner in writing within five working days of receipt of the RFI response.

PART 2 - PRODUCTS (Not Used)

PART 3 - EXECUTION (Not Used)

END OF SECTION

© 2012 City of Franklin, Tennessee. All rights reserved.

PART 1 - GENERAL

1.1 RELATED DOCUMENTS

A. Drawings and general provisions of the Contract, including General and Supplementary Conditions and other Division 01 Specification Sections, apply to this Section.

1.2 SUMMARY

A. This Section includes administrative and procedural requirements for submitting Shop Drawings, Product Data, Samples, and other miscellaneous submittals.

B. Related Sections include the following:
1. Division 01 Section "Payment Procedures" for submitting Application for Payment.
2. Division 01 Section "Closeout Procedures" for submitting warranties and Project Record Documents.
3. Division 01 Section "Project Record Documents" for submitting Record Drawings, Record Specifications, and Record Product Data.

1.3 DEFINITIONS

A. Action Submittals: Written and graphic information that requires Owner's responsive action. B.

Informational Submittals: Written information that does not require Owner's approval. Submittals may be rejected for not complying with requirements.

1.4 SUBMITTAL PROCEDURES

A. General: Electronic copies of base plans of the Contract Drawings for Contractor's use in preparing submittals will not be provided.

B. Coordination: Coordinate preparation and processing of submittals with performance of construction activities.
1. Coordinate each submittal with fabrication, purchasing, testing, delivery, other submittals, and related activities that require sequential activity.
2. Coordinate transmittal of different types of submittals for related parts of the Work so processing will not be delayed because of need to review submittals concurrently for coordination.
   a. Owner reserves the right to withhold action on a submittal requiring coordination with other submittals until related submittals are received.

C. Processing Time: Allow enough time for submittal review, including time for resubmittals, as follows. Time for review shall commence on Owner's receipt of submittal.
1. Initial Review: Allow 15 days for initial review of each submittal. Allow additional time if processing must be delayed to permit coordination with subsequent submittals. Owner will advise Contractor when a submittal being processed must be delayed for coordination.
2. If resubmittal is necessary, process it in same manner as initial submittal.
3. Allow 15 days for processing each resubmittal.
4. No extension of the Contract Time will be authorized because of failure to transmit submittals enough in advance of the Work to permit processing.

© 2012 City of Franklin, Tennessee. All rights reserved.

5. Submittals out of sequence from agreed upon schedule may result in back charges to the Contractor.

D. Identification: Place a permanent label or title block on each submittal for identification.
   1. Indicate name of firm or entity that prepared each submittal on label or title block.
   2. Provide a space on label or beside title block to record Contractor's review and approval markings.
   3. Include the following information on label for processing and recording action taken:
      a. Project name.
      b. Date.
      c. Name and address of Contractor.
      d. Name and address of subcontractor.
      e. Name and address of supplier.
      f. Name of manufacturer.
      g. Unique identifier, including revision number.
      h. Number and title of appropriate Specification Section.
      i. Drawing number and detail references, as appropriate.
      j. Other necessary identification.

E. Deviations: Highlight, encircle, or otherwise identify deviations from the Contract Documents on submittals.

F. Copies: Unless additional copies are required for final submittal, and unless Owner observes noncompliance with provisions of the Contract Documents, initial submittal may serve as final submittal.
   1. Submit one copy of submittal to concurrent reviewer in addition to specified number of copies to Owner.
   2. Additional copies submitted for maintenance manuals will not be marked with action taken and will be returned.

G. Transmittal: Package each submittal individually and appropriately for transmittal and handling. Transmit each submittal using a transmittal form. Owner will return submittals, without review, received from sources other than Contractor.

H. Distribution: Furnish copies of final submittals to manufacturers, subcontractors, suppliers, fabricators, installers, authorities having jurisdiction, and others as necessary for performance of construction activities. Show distribution on transmittal forms.

I. Use for Construction: Use only final submittals with mark indicating action taken by Owner in connection with construction.

PART 2 - PRODUCTS

2.1 ACTION SUBMITTALS

A. General: Prepare and submit Action Submittals required by individual Specification Sections.

B. Product Data: Collect information into a single submittal for each element of construction and type of product or equipment.

© 2012 City of Franklin, Tennessee. All rights reserved.

1. If information must be specially prepared for submittal because standard printed data are not suitable for use, submit as Shop Drawings, not as Product Data.
2. Mark each copy of each submittal to show which products and options are applicable.
3. Include the following information, as applicable:
   a. Manufacturer's written recommendations.
   b. Manufacturer's product specifications.
   c. Manufacturer's installation instructions.
   d. Standard color charts.
   e. Manufacturer's catalog cuts.
   f. Wiring diagrams showing factory-installed wiring.
   g. Printed performance curves.
   h. Operational range diagrams.
   i. Mill reports.
   j. Standard product operating and maintenance manuals.
   k. Compliance with recognized trade association standards.
   l. Compliance with recognized testing agency standards.
   m. Application of testing agency labels and seals.
   n. Notation of coordination requirements.
4. Number of Copies: Submit three copies, plus the number of copies the Contractor desires to have returned.

C. Shop Drawings: Prepare Project-specific information, drawn accurately to scale. Do not base Shop Drawings on reproductions of the Contract Documents or standard printed data.
1. Preparation: Include the following information, as applicable:
   a. Dimensions.
   b. Identification of products.
   c. Fabrication and installation drawings.
   d. Roughing-in and setting diagrams.
   e. Wiring diagrams showing field-installed wiring, including power, signal, and control wiring.
   f. Shopwork manufacturing instructions.
   g. Templates and patterns.
   h. Schedules.
   i. Design calculations.
   j. Compliance with specified standards.
   k. Notation of coordination requirements.
   l. Notation of dimensions established by field measurement.
2. Wiring Diagrams: Differentiate between manufacturer-installed and field-installed wiring.
3. Number of Copies: Submit three copies plus the number of copies the Contractor desires to have returned of each submittal Owner will retain three prints; remainder will be returned.

D. Samples: Prepare physical units of materials or products, including the following:
1. Samples for Initial Selection: Submit manufacturer's color charts consisting of units or sections of units showing the full range of colors, textures, and patterns available.
2. Samples for Verification: Submit full-size units or Samples of size indicated, prepared from the same material to be used for the Work, cured and finished in manner specified, and physically identical with the product proposed for use, and that show full range of color and texture variations expected. Samples include, but are not limited to, the following: partial sections of manufactured or fabricated components; small cuts or

© 2012 City of Franklin, Tennessee. All rights reserved.

containers of materials; complete units of repetitively used materials; swatches showing color, texture, and pattern; color range sets; and components used for independent testing and inspection.

3. Preparation: Mount, display, or package Samples in manner specified to facilitate review of qualities indicated. Attach label on unexposed side that includes the following:
   a. Generic description of Sample.
   b. Product name or name of manufacturer.
   c. Sample source.
   d. Submit a single Sample where assembly details, workmanship, fabrication techniques, connections, operation, and other similar characteristics are to be demonstrated.
4. Disposition: Maintain sets of approved Samples at Project site, available for quality-control comparisons throughout the course of construction activity. Sample sets may be used to determine final acceptance of construction associated with each set.

E. Subcontract List: Prepare a written summary identifying individuals or firms proposed for each portion of the Work, including those who are to furnish products or equipment fabricated to a special design. Include the following information in tabular form:
   1. Name, address, and telephone number of entity performing subcontract or supplying products.
   2. Number and title of related Specification Section(s) covered by subcontract.
   3. Drawing number and detail references, as appropriate, covered by subcontract.

2.2 INFORMATIONAL SUBMITTALS

A. General: Prepare and submit Informational Submittals required by other Specification Sections.
   1. Number of Copies: Submit two copies of each submittal, unless otherwise indicated. Owner will not return copies.
   2. Certificates and Certifications: Provide a notarized statement that includes signature of entity responsible for preparing certification. Certificates and certifications shall be signed by an officer or other individual authorized to sign documents on behalf of that entity.
   3. Test and Inspection Reports: Comply with requirements in Division 01 Section "Quality Requirements."

B. Qualification Data: Prepare written information that demonstrates capabilities and experience of firm or person. Include lists of completed projects with project names and addresses, names and addresses of owners and engineers, and other information specified.

C. Product Certificates: Prepare written statements on manufacturer's letterhead certifying that product complies with requirements.

D. Welding Certificates: Prepare written certification that welding procedures and personnel comply with requirements. Submit record of Welding Procedure Specification (WPS) and Procedure Qualification Record (PQR) on AWS forms. Include names of firms and personnel certified.

© 2012 City of Franklin, Tennessee. All rights reserved.

E. Installer Certificates: Prepare written statements on manufacturer's letterhead certifying that Installer complies with requirements and, where required, is authorized for this specific Project.

F. Manufacturer Certificates: Prepare written statements on manufacturer's letterhead certifying that manufacturer complies with requirements. Include evidence of manufacturing experience where required.

G. Material Certificates: Prepare written statements on manufacturer's letterhead certifying that material complies with requirements.

H. Material Test Reports: Prepare reports written by a qualified testing agency, on testing agency's standard form, indicating and interpreting test results of material for compliance with requirements.

I. Preconstruction Test Reports: Prepare reports written by a qualified testing agency, on testing agency's standard form, indicating and interpreting results of tests performed before installation of product, for compliance with performance requirements.

J. Compatibility Test Reports: Prepare reports written by a qualified testing agency, on testing agency's standard form, indicating and interpreting results of compatibility tests performed before installation of product. Include written recommendations for primers and substrate preparation needed for adhesion.

K. Field Test Reports: Prepare reports written by a qualified testing agency, on testing agency's standard form, indicating and interpreting results of field tests performed either during installation of product or after product is installed in its final location, for compliance with requirements.

L. Product Test Reports: Prepare written reports indicating current product produced by manufacturer complies with requirements. Base reports on evaluation of tests performed by manufacturer and witnessed by a qualified testing agency, or on comprehensive tests performed by a qualified testing agency.

M. Maintenance Data: Prepare written and graphic instructions and procedures for operation and normal maintenance of products and equipment. Comply with requirements in Division 01 Section "Closeout Procedures."

N. Manufacturer's Instructions: Prepare written or published information that documents manufacturer's recommendations, guidelines, and procedures for installing or operating a product or equipment. Include name of product and name, address, and telephone number of manufacturer. Include the following, as applicable:
   1. Preparation of substrates.
   2. Required substrate tolerances.
   3. Sequence of installation or erection.
   4. Required installation tolerances.
   5. Required adjustments.
   6. Recommendations for cleaning and protection.

O. Manufacturer's Field Reports: Prepare written information documenting factory-authorized service representative's tests and inspections. Include the following, as applicable:

© 2012 City of Franklin, Tennessee. All rights reserved.

1. Name, address, and telephone number of factory-authorized service representative making report.
2. Statement on condition of substrates and their acceptability for installation of product.
3. Statement that products at Project site comply with requirements.
4. Summary of installation procedures being followed, whether they comply with requirements and, if not, what corrective action was taken.
5. Results of operational and other tests and a statement of whether observed performance complies with requirements.
6. Statement whether conditions, products, and installation will affect warranty.
7. Other required items indicated in individual Specification Sections.

P. Insurance Certificates and Bonds: Prepare written information indicating current status of insurance or bonding coverage. Include name of entity covered by insurance or bond, limits of coverage, amounts of deductibles, if any, and term of the coverage.

PART 3 - EXECUTION

3.1 CONTRACTOR'S REVIEW

A. Review each submittal and check for compliance with the Contract Documents. Note corrections and field dimensions. Mark with approval stamp before submitting to Owner.

B. Approval Stamp: Stamp each submittal with a uniform, approval stamp. Include Project name and location, submittal number, Specification Section title and number, name of reviewer, date of Contractor's approval, and statement certifying that submittal has been reviewed, checked, and approved for compliance with the Contract Documents.

3.2 OWNER'S ACTION

A. General: Owner will not review submittals that do not bear Contractor's approval stamp and will return them without action.
1. Review of submittals by Owner is only for the limited purpose of checking for conformance with information given and the design concept expressed in the Contract Documents.
2. Review of submittals by Owner is <u>not</u> for purpose of determining the accuracy and completeness of dimensions and quantities, or substantiating installation instructions.

B. Action Submittals: Owner will review each submittal, make marks to indicate corrections or modifications required, and return it. Owner will stamp each submittal with an action stamp and will mark stamp appropriately to indicate action taken, as follows:
1. No Exceptions Noted: Where submittal is marked "No Exceptions Noted", the Work covered by the submittal may proceed provided it complies with the Contract Documents.
2. Exceptions Noted: Where submittal is marked "Exceptions Noted", the Work covered by the submittal may proceed provided it complies with both Owner's notations and corrections on the submittal and the Contract Documents.
3. Exceptions Noted - Resubmit: Where the submittal is marked "Exceptions Noted – Resubmit", do not proceed with the Work covered by the submittal, including purchasing, fabrication, delivery, or other activity for the product submitted. Revise or prepare a new submittal according to Owner's notations and corrections.

© 2012 City of Franklin, Tennessee. All rights reserved.

4. Resubmit: Where the submittal is marked "Resubmit", do not proceed with the Work covered by the submittal. Prepare a new submittal for a product that complies with the Contract Documents.
5. Information: Where the submittal is marked "Information", the Owner is neither approving nor disapproving the information provided within the submittal. This indication may be placed upon design calculations from Contractor, schedules, installation procedures, standards or regulations, etc.

C. Submittals not required by the Contract Documents will not be reviewed and may be discarded.

END OF SECTION

© 2012 City of Franklin, Tennessee. All rights reserved.

QUALITY REQUIREMENTS
Section 01 4000

PART 1 - GENERAL

1.1 RELATED DOCUMENTS

A. Drawings and general provisions of the Contract, including General and Supplementary Conditions and other Division 01 Specification Sections, apply to this Section.

1.2 SUMMARY

A. This Section includes administrative and procedural requirements for quality assurance and quality control.

B. Testing and inspecting services are required to verify compliance with requirements specified or indicated. These services do not relieve Contractor of responsibility for compliance with the Contract Document requirements.
   1. Specific quality-assurance and quality-control requirements for individual construction activities are specified in the Sections that specify those activities. Requirements in those Sections may also cover production of standard products.
   2. Specified tests, inspections, and related actions do not limit Contractor's other quality-assurance and quality-control procedures that facilitate compliance with the Contract Document requirements.
   3. Requirements for Contractor to provide quality-assurance and quality-control services required by Engineer, Owner, or authorities having jurisdiction are not limited by provisions of this Section.

C. Related Sections include the following:
   1. Division 01 Section "Contract Modification Procedures" for Change Order requirements.

1.3 DEFINITIONS

A. Quality-Assurance Services: Activities, actions, and procedures performed before and during execution of the Work to guard against defects and deficiencies and substantiate that proposed construction will comply with requirements.

B. Quality-Control Services: Tests, inspections, procedures, and related actions during and after execution of the Work to evaluate that actual products incorporated into the Work and completed construction comply with requirements. Services do not include contract enforcement activities performed by Owner.

C. Preconstruction Testing: Tests and inspections that are performed specifically for the Project before products and materials are incorporated into the Work to verify performance or compliance with specified criteria.

D. Product Testing: Tests and inspections that are performed by an NRTL, an NVLAP, or a testing agency qualified to conduct product testing and acceptable to authorities having jurisdiction, to establish product performance and compliance with industry standards.

E. Source Quality-Control Testing: Tests and inspections that are performed at the source, i.e., plant, mill, factory, or shop.

© 2012 City of Franklin, Tennessee. All rights reserved.

F. Field Quality-Control Testing: Tests and inspections that are performed on-site for installation of the Work and for completed Work.

G. Testing Agency: An entity engaged to perform specific tests, inspections, or both. Testing laboratory shall mean the same as testing agency.

H. Installer/Applicator/Erector: Contractor or another entity engaged by Contractor as an employee, Subcontractor, or Sub-subcontractor, to perform a particular construction operation, including installation, erection, application, and similar operations.
Using a term such as "carpentry" does not imply that certain construction activities must be performed by accredited or unionized individuals of a corresponding generic name, such as "carpenter." It also does not imply that requirements specified apply exclusively to trades-people of the corresponding generic name.

I. Experienced: When used with an entity, "experienced" means having successfully completed a minimum of five previous projects similar in size and scope to this Project; being familiar with special requirements indicated; and having complied with requirements of authorities having jurisdiction.

1.4 CONFLICTING REQUIREMENTS

A. General: If compliance with two or more standards is specified and the standards establish different or conflicting requirements for minimum quantities or quality levels, comply with the most stringent requirement. Refer uncertainties and requirements that are different, but apparently equal, to Owner for a decision before proceeding.

B. Minimum Quantity or Quality Levels: The quantity or quality level shown or specified shall be the minimum provided or performed. The actual installation may comply exactly with the minimum quantity or quality specified, or it may exceed the minimum within reasonable limits. To comply with these requirements, indicated numeric values are minimum or maximum, as appropriate, for the context of requirements. Refer uncertainties to Owner for a decision before proceeding.

1.5 SUBMITTALS

A. Qualification Data: For testing agencies specified in "Quality Assurance" Article to demonstrate their capabilities and experience. Include proof of qualifications in the form of a recent report on the inspection of the testing agency by a recognized authority.

B. Schedule of Tests and Inspections: Prepare in tabular form and include the following:
1. Specification Section number and title.
2. Description of test and inspection.
3. Identification of applicable standards.
4. Identification of test and inspection methods.
5. Number of tests and inspections required.
6. Time schedule or time span for tests and inspections.
7. Entity responsible for performing tests and inspections.
8. Requirements for obtaining samples.
9. Unique characteristics of each quality-control service.

C. Reports: Prepare and submit certified written reports that include the following:
1. Date of issue.

© 2012 City of Franklin, Tennessee. All rights reserved.

2. Project title and number.
3. Name, address, and telephone number of testing agency.
4. Dates and locations of samples and tests or inspections.
5. Names of individuals making tests and inspections.
6. Description of the Work and test and inspection method.
7. Identification of product and Specification Section.
8. Complete test or inspection data.
9. Test and inspection results and an interpretation of test results.
10. Record of temperature and weather conditions at time of sample taking and testing and inspecting.
11. Comments or professional opinion on whether tested or inspected Work complies with the Contract Document requirements.
12. Name and signature of laboratory inspector.
13. Recommendations on retesting and reinspecting.

D. Permits, Licenses, and Certificates: For Owner's records, submit copies of permits, licenses, certifications, inspection reports, releases, jurisdictional settlements, notices, receipts for fee payments, judgments, correspondence, records, and similar documents, established for compliance with standards and regulations bearing on performance of the Work.

1.6 QUALITY ASSURANCE

A. General: Qualifications paragraphs in this Article establish the minimum qualification levels required; individual Specification Sections specify additional requirements.

B. Installer Qualifications: A firm or individual experienced in installing, erecting, or assembling work similar in material, design, and extent to that indicated for this Project, whose work has resulted in construction with a record of successful in-service performance.

C. Manufacturer Qualifications: A firm experienced in manufacturing products or systems similar to those indicated for this Project and with a record of successful in-service performance, as well as sufficient production capacity to produce required units.

D. Fabricator Qualifications: A firm experienced in producing products similar to those indicated for this Project and with a record of successful in-service performance, as well as sufficient production capacity to produce required units.

E. Professional Engineer Qualifications: A professional engineer who is legally qualified to practice and maintains current licensure in the state of Tennessee, and who is experienced in providing engineering services of the kind indicated. Engineering services are defined as those performed for installations of the system, assembly, or products that are similar to those indicated for this Project in material, design, and extent.

F. Specialists: Certain sections of the Specifications require that specific construction activities shall be performed by entities who are recognized experts in those operations. Specialists shall satisfy qualification requirements indicated and shall be engaged for the activities indicated.
   1. Requirement for specialists shall not supersede building codes and regulations governing the Work.

© 2012 City of Franklin, Tennessee. All rights reserved.

G. Testing Agency Qualifications: An NRTL, an NVLAP, or an independent agency with the experience and capability to conduct testing and inspecting indicated, as documented according to ASTM E 548; and with additional qualifications specified in individual Sections; and where required by authorities having jurisdiction, that is acceptable to authorities.
   1. NRTL: A nationally recognized testing laboratory according to 29 CFR 1910.7.
   2. NVLAP: A testing agency accredited according to NIST's National Voluntary Laboratory Accreditation Program.

H. Factory-Authorized Service Representative Qualifications: An authorized representative of manufacturer who is trained and approved by manufacturer to inspect installation of manufacturer's products that are similar in material, design, and extent to those indicated for this Project.

I. Preconstruction Testing: Where testing agency is indicated to perform preconstruction testing for compliance with specified requirements for performance and test methods, comply with the following:
   1. Contractor responsibilities include the following:
      a. Provide test specimens representative of proposed products and construction.
      b. Submit specimens in a timely manner with sufficient time for testing and analyzing results to prevent delaying the Work.
      c. Provide sizes and configurations of test assemblies, mockups, and laboratory mockups to adequately demonstrate capability of products to comply with performance requirements.
      d. Build site-assembled test assemblies and mockups using installers who will perform same tasks for Project.
      e. Build laboratory mockups at testing facility using personnel, products, and methods of construction indicated for the completed Work.
      f. When testing is complete, remove test specimens, assemblies, mockups, and laboratory mockups; do not reuse products on Project.
   2. Testing Agency Responsibilities: Submit a certified written report of each test, inspection, and similar quality-assurance service to Owner, with copy to Contractor. Interpret tests and inspections and state in each report whether tested and inspected work complies with or deviates from the Contract Documents.

1.7 QUALITY CONTROL

A. Owner Responsibilities: Where quality-control services are indicated as Owner's responsibility, Owner will engage a qualified testing agency to perform these services.
   1. Owner will furnish Contractor with names, addresses, and telephone numbers of testing agencies engaged and a description of types of testing and inspecting they are engaged to perform.
   2. Payment for these services will be made from testing and inspecting allowances, as authorized by Change Orders.
   3. Costs for retesting and reinspecting construction that replaces or is necessitated by work that failed to comply with the Contract Documents will be charged to Contractor.

B. Tests and inspections not explicitly assigned to Owner are Contractor's responsibility. Unless otherwise indicated, provide quality-control services specified and those required by authorities having jurisdiction. Perform quality-control services required of Contractor by authorities having jurisdiction, whether specified or not.

© 2012 City of Franklin, Tennessee. All rights reserved.

1. Where services are indicated as Contractor's responsibility, engage a qualified testing agency to perform these quality-control services.
   a. Contractor shall not employ same entity engaged by Owner, unless agreed to in writing by Owner.
2. Notify testing agencies at least 24 hours in advance of time when Work that requires testing or inspecting will be performed.
3. Where quality-control services are indicated as Contractor's responsibility, submit a certified written report, in duplicate, of each quality-control service.
4. Testing and inspecting requested by Contractor and not required by the Contract Documents are Contractor's responsibility.
5. Submit additional copies of each written report directly to authorities having jurisdiction, when they so direct.

C. Manufacturer's Field Services: Where indicated, engage a factory-authorized service representative to inspect field-assembled components and equipment installation, including service connections. Report results in writing as specified in Division 01 Section "Submittal Procedures."

D. Retesting/Reinspecting: Regardless of whether original tests or inspections were Contractor's responsibility, provide quality-control services, including retesting and reinspecting, for construction that replaced Work that failed to comply with the Contract Documents.

E. Testing Agency Responsibilities: Cooperate with Owner and Contractor in performance of duties. Provide qualified personnel to perform required tests and inspections.
1. Notify Owner and Contractor promptly of irregularities or deficiencies observed in the Work during performance of its services.
2. Determine the location from which test samples will be taken and in which in-situ tests are conducted.
3. Conduct and interpret tests and inspections and state in each report whether tested and inspected work complies with or deviates from requirements.
4. Submit a certified written report, in duplicate, of each test, inspection, and similar quality-control service through Contractor.
5. Do not release, revoke, alter, or increase the Contract Document requirements or approve or accept any portion of the Work.
6. Do not perform any duties of Contractor.

F. Associated Services: Cooperate with agencies performing required tests, inspections, and similar quality-control services, and provide reasonable auxiliary services as requested. Notify agency sufficiently in advance of operations to permit assignment of personnel. Provide the following:
1. Access to the Work.
2. Incidental labor and facilities necessary to facilitate tests and inspections.
3. Adequate quantities of representative samples of materials that require testing and inspecting. Assist agency in obtaining samples.
4. Facilities for storage and field-curing of test samples.
5. Delivery of samples to testing agencies.
6. Preliminary design mix proposed for use for material mixes that require control by testing agency.
7. Security and protection for samples and for testing and inspecting equipment at Project site.

© 2012 City of Franklin, Tennessee. All rights reserved.

G. Coordination: Coordinate sequence of activities to accommodate required quality assurance and control services with a minimum of delay and to avoid necessity of removing and replacing construction to accommodate testing and inspecting.
   1. Schedule times for tests, inspections, obtaining samples, and similar activities.

H. Schedule of Tests and Inspections: Prepare a schedule of tests, inspections, and similar quality-control services required by the Contract Documents. Submit schedule within 30 days of date established for commencement of the Work.
   1. Distribution: Distribute schedule to Owner, Engineer, testing agencies, and each party involved in performance of portions of the Work where tests and inspections are required.

1.8 SPECIAL TESTS AND INSPECTIONS

A. Special Tests and Inspections: Conducted by a qualified testing agency as required by authorities having jurisdiction, as indicated in individual Specification Sections, and as follows:
   1. Verifying that manufacturer maintains detailed fabrication and quality-control procedures and reviewing the completeness and adequacy of those procedures to perform the Work.
   2. Notifying Owner and Contractor promptly of irregularities and deficiencies observed in the Work during performance of its services.
   3. Submitting a certified written report of each test, inspection, and similar quality-control service to Owner, with copy to Contractor and to authorities having jurisdiction.
   4. Submitting a final report of special tests and inspections at Substantial Completion, that includes a list of unresolved deficiencies.
   5. Interpreting tests and inspections and stating in each report whether tested and inspected work complies with or deviates from the Contract Documents.
   6. Retesting and reinspecting corrected work.

PART 2 - PRODUCTS (Not Used)

PART 3 - EXECUTION

3.1 TEST AND INSPECTION LOG

A. Prepare a record of tests and inspections. Include the following:
   1. Date test or inspection was conducted.
   2. Description of the Work tested or inspected.
   3. Date test or inspection results were transmitted to Owner.
   4. Identification of testing agency or special inspector conducting test or inspection.

B. Maintain log at Project site. Post changes and modifications as they occur. Provide access to test and inspection log for Owner's reference during normal working hours.

3.2 REPAIR AND PROTECTION

A. General: On completion of testing, inspecting, sample taking, and similar services, repair damaged construction and restore substrates and finishes.

© 2012 City of Franklin, Tennessee. All rights reserved.

1. Provide materials and comply with installation requirements specified in other Specification Sections. Restore patched areas and extend restoration into adjoining areas with durable seams that are as invisible as possible.

B. Protect construction exposed by or for quality-control service activities.

C. Repair and protection are Contractor's responsibility, regardless of the assignment of responsibility for quality-control services.

END OF SECTION

© 2012 City of Franklin, Tennessee. All rights reserved.

PART 1 - GENERAL

1.1 RELATED DOCUMENTS

A. Drawings and general provisions of the Contract, including General and Supplementary Conditions and other Division 01 Specification Sections, apply to this Section.

1.2 DEFINITIONS

A. General: Basic Contract definitions are included in the Conditions of the Contract.

B. "Approved": When used to convey Owner's action on Contractor's submittals, applications, and requests, "approved" is limited to Owner's duties and responsibilities as stated in the Conditions of the Contract.

C. "Directed": A command or instruction by Owner. Other terms including "requested," "authorized," "selected," "approved," "required," and "permitted" have the same meaning as "directed."

D. "Indicated": Requirements expressed by graphic representations or in written form on Drawings, in Specifications, and in other Contract Documents. Other terms including "shown," "noted," "scheduled," and "specified" have the same meaning as "indicated."

E. "Regulations": Laws, ordinances, statutes, and lawful orders issued by authorities having jurisdiction, and rules, conventions, and agreements within the construction industry that control performance of the Work.

F. "Furnish": Supply and deliver to Project site, ready for unloading, unpacking, assembly, installation, and similar operations.

G. "Install": Operations at Project site including unloading, temporarily storing, unpacking, assembling, erecting, placing, anchoring, applying, working to dimension, finishing, curing, protecting, cleaning, and similar operations.

H. "Provide": Furnish and install, complete and ready for the intended use.

I. "Project Site": Space available for performing construction activities. The extent of Project site is shown on Drawings and may or may not be identical with the description of the land on which Project is to be built.

1.3 INDUSTRY STANDARDS

A. Applicability of Standards: Unless the Contract Documents include more stringent requirements, applicable construction industry standards have the same force and effect as if bound or copied directly into the Contract Documents to the extent referenced. Such standards are made a part of the Contract Documents by reference.

B. Publication Dates: Comply with standards in effect as of date of the Contract Documents, unless otherwise indicated.

© 2012 City of Franklin, Tennessee. All rights reserved.

1.4 ABBREVIATIONS AND ACRONYMS

A. Industry Organizations: Where abbreviations and acronyms are used in Specifications or other Contract Documents, they shall mean the recognized name of the entities in the following list. Names, telephone numbers, and Web site addresses are subject to change and are believed to be accurate and up-to-date as of the date of the Contract Documents.

AA	Aluminum Association, Inc. (The) www.aluminum.org	(202) 862-5100
AASHTO	American Association of State Highway and Transportation Officials www.transportation .org	(202) 624-5800
ACI	ACI International (American Concrete Institute) www.aci-int.org	(248) 848-3700
ACPA	American Concrete Pipe Association www.concrete-pipe.org	(972) 506-7216
AGA	American Gas Association www.aga.org	(202) 824-7000
AI	Asphalt Institute www.asphaltinstitute.org	(859) 288-4960
AISC	American Institute of Steel Construction www.aisc.org	(800) 644-2400 (312) 670-2400
AISI	American Iron and Steel Institute www.steel.org	(202) 452-7100
ANSI	American National Standards Institute www.ansi.org	(202) 293-8020
AOSA	Association of Official Seed Analysts www.aosaseed.com	(505) 522-1437
APA	Architectural Precast Association www.archprecast.org	(239) 454-6989
ASCE	American Society of Civil Engineers www.asce.org	(800) 548-2723 (703) 295-6300
ASHRAE	American Society of Heating, Refrigerating and Air-Conditioning Engineers www.ashrae.org	(800) 527-4723 (404) 636-8400
ASME	ASME International (The American Society of Mechanical Engineers International) www.asme.org	(800) 843-2763 (212) 591-7722

© 2012 City of Franklin, Tennessee. All rights reserved.

ASSE	American Society of Sanitary Engineering www.asse-plumbing.org	(440) 835-3040
ASTM	ASTM International (American Society for Testing and Materials International) www.astm.org	(610) 832-9585
AWS	American Welding Society www.aws.org	(800) 443-9353 (305) 443-9353
AWWA	American Water Works Association www.awwa.org	(800) 926-7337 (303) 794-7711
CDA	Copper Development Association Inc. www.copper.org	(800) 232-3282 (212) 251-7200
CGA	Compressed Gas Association www.cganet.com	(703) 788-2700
CLFMI	Chain Link Fence Manufacturers Institute www.chainlinkinfo.org	(301) 596-2583
CPPA	Corrugated Polyethylene Pipe Association www.cppa-info.org	(800) 510-2772 (202) 462-9607
CRSI	Concrete Reinforcing Steel Institute www.crsi.org	(847) 517-1200
CSI	Construction Specifications Institute (The) www.csinet.org	(800) 689-2900 (703) 684-0300
EJCDC	Engineers Joint Contract Documents Committee www.asce.org	(800) 548-2723 (703) 295-6300
EJMA	Expansion Joint Manufacturers Association, Inc. www.ejma.org	(914) 332-0040
FCI	Fluid Controls Institute www.fluidcontrolsinstitute.org	(216) 241-7333
FM	Factory Mutual System (See FMG)	
FMG	FM Global (Formerly: FM - Factory Mutual System) www.fmglobal.com	(401) 275-3000
FSA	Fluid Sealing Association www.fluidsealing.com	(610) 971-4850
GRI	Geosynthetic Research Institute (See GSI)	
GSI	Geosynthetic Institute www.geosynthetic-institute.org	(610) 522-8440
HI	Hydraulic Institute www.pumps.org	(888) 786-7744 (973) 267-9700

© 2012 City of Franklin, Tennessee. All rights reserved.

HI	Hydronics Institute www.gamanet.org	(908) 464-8200
IEEE	Institute of Electrical and Electronics Engineers, Inc. (The) www.ieee.org	(212) 419-7900
ISO	International Organization for Standardization www.iso.ch	41 22 749 01 11
LPI	Lightning Protection Institute www.lightning.org	(800) 488-6864 (847) 577-7200
MBMA	Metal Building Manufacturers Association www.mbma.com	(216) 241-7333
MSS	Manufacturers Standardization Society of The Valve and Fittings Industry Inc. www.mss-hq.com	(703) 281-6613
NACE	NACE International (National Association of Corrosion Engineers International) www.nace.org	(281) 228-6200
NCMA	National Concrete Masonry Association www.ncma.org	(703) 713-1900
NCPI	National Clay Pipe Institute www.ncpi.org	(262) 248-9094
NEMA	National Electrical Manufacturers Association www.nema.org	(703) 841-3200
NFPA	NFPA www.nfpa.org	(800) 344-3555 (617) 770-3000
NRMCA	National Ready Mixed Concrete Association www.nrmca.org	(888) 846-7622 (301) 587-1400
NSF	NSF International (National Sanitation Foundation International) www.nsf.org	(800) 673-6275 (734) 769-8010
NSSGA	National Stone, Sand & Gravel Association www.nssga.org	(800) 342-1415 (703) 525-8788
PCI	Precast/Prestressed Concrete Institute www.pci.org	(312) 786-0300
SAE	SAE International www.sae.org	(724) 776-4841
SPI/SPFD	Society of the Plastics Industry, Inc. (The) Spray Polyurethane Foam Division (See SPFA)	

© 2012 City of Franklin, Tennessee. All rights reserved.

SSPC	SSPC: The Society for Protective Coatings www.sspc.org	(877) 281-7772 (412) 281-2331
STI	Steel Tank Institute www.steeltank.com	(847) 438-8265
SWRI	Sealant, Waterproofing, & Restoration Institute www.swrionline.org	(816) 472-7974
TMS	The Masonry Society www.masonrysociety.org	(303) 939-9700
UL	Underwriters Laboratories Inc. www.ul.com	(800) 285-4476 (847) 272-8800
UNI	Uni-Bell PVC Pipe Association www.uni-bell.org	(972) 243-3902
WASTEC	Waste Equipment Technology Association www.wastec.org	(800) 424-2869 (202) 244-4700

B. Code Agencies: Where abbreviations and acronyms are used in Specifications or other Contract Documents, they shall mean the recognized name of the entities in the following list. Names, telephone numbers, and Web site addresses are subject to change and are believed to be accurate and up-to-date as of the date of the Contract Documents.

BOCA	BOCA International, Inc. (See ICC)	
CABO	Council of American Building Officials (See ICC)	
IAPMO	International Association of Plumbing and Mechanical Officials www.iapmo.org	(909) 472-4100
ICBO	International Conference of Building Officials (See ICC)	
ICBO ES	ICBO Evaluation Service, Inc. (See ICC-ES)	
ICC	International Code Council (Formerly: CABO - Council of American Building Officials) www.iccsafe.org	(703) 931-4533
ICC-ES	ICC Evaluation Service, Inc. www.icc-es.org	(800) 423-6587 (562) 699-0543
SBCCI	Southern Building Code Congress International, Inc. (See ICC)	

C. Federal Government Agencies: Where abbreviations and acronyms are used in Specifications or other Contract Documents, they shall mean the recognized name of the entities in the following list. Names, telephone numbers, and Web site addresses are subject to change and are believed to be accurate and up-to-date as of the date of the Contract Documents.

© 2012 City of Franklin, Tennessee. All rights reserved.

CE	Army Corps of Engineers www.usace.army.mil	
EPA	Environmental Protection Agency www.epa.gov	(202) 272-0167
FAA	Federal Aviation Administration www.faa.gov	(202) 366-4000
NOAA	National Oceanic and Atmospheric Administration www.noaa.gov	(202) 482-3154
HUD	Department of Housing and Urban Development www.hud.gov	(202) 708-1112
OSHA	Occupational Safety & Health Administration www.osha.gov	(800) 321-6742 (202) 693-1999
RUS	Rural Utilities Service (See USDA)	(202) 720-9540
USDA	United States Department of Agriculture www.usda.gov	(202) 720-2791
USPS	United States Postal Service www.usps.com	(202) 268-2000

D. Standards and Regulations: Where abbreviations and acronyms are used in Specifications or other Contract Documents, they shall mean the recognized name of the standards and regulations in the following list. Names, telephone numbers, and Web sites are subject to change and are believed to be accurate and up-to-date as of the date of the Contract Documents.

ADAAG	Americans with Disabilities Act (ADA) Architectural Barriers Act (ABA) Accessibility Guidelines for Buildings and Facilities Available from U.S. Access Board www.access-board.gov	(800) 872-2253 (202) 272-0080
CFR	Code of Federal Regulations Available from Government Printing Office www.gpoaccess.gov/cfr/index.html	(866) 512-1800 (202) 512-1800

E. State Government Agencies: Where abbreviations and acronyms are used in Specifications or other Contract Documents, they shall mean the recognized name of the entities in the following list. Names, telephone numbers, and Web site addresses are subject to change and are believed to be accurate and up-to-date as of the date of the Contract Documents.

© 2012 City of Franklin, Tennessee. All rights reserved.

Tennessee		
DWPC	TDEC Division of Water Pollution Control www.state.tn.us/environment/wpc/	(615) 532-0625
DWS	TDEC Division of Water Supply www.state.tn.us/environment/dws/	(615) 532-1549
TDEC	Tennessee Department of Environment and Conservation www.state.tn.us/environment/	1-888-891-8332

PART 2 - PRODUCTS (Not Used)

PART 3 - EXECUTION (Not Used)

END OF SECTION

© 2012 City of Franklin, Tennessee. All rights reserved.

PART 1 - GENERAL

1.1 RELATED DOCUMENTS

A. Drawings and general provisions of the Contract, including General and Supplementary Conditions and other Division 01 Specification Sections, apply to this Section.

1.2 SUMMARY

A. This Section includes requirements for temporary facilities and controls, including temporary utilities, support facilities, and security and protection facilities.

B. Temporary utilities include, but are not limited to, the following:
1. Sewers and drainage.
2. Water service and distribution.
3. Sanitary facilities, including toilets, wash facilities, and drinking-water facilities.
4. Heating and cooling facilities.
5. Ventilation.
6. Electric power service.
7. Lighting.
8. Telephone service.

C. Support facilities include, but are not limited to, the following:
1. Temporary roads and paving.
2. Dewatering facilities and drains.
3. Project identification and temporary signs.
4. Waste disposal facilities.
5. Field offices.
6. Storage and fabrication sheds.
7. Lifts and hoists.
8. Temporary stairs.
9. Construction aids and miscellaneous services and facilities.

D. Security and protection facilities include, but are not limited to, the following:
1. Environmental protection.
2. Stormwater control.
3. Tree and plant protection.
4. Pest control.
5. Site enclosure fence.
6. Security enclosure and lockup.
7. Barricades, warning signs, and lights.
8. Covered walkways.
9. Temporary enclosures.
10. Temporary partitions.
11. Fire protection.

E. Related Sections include the following:
1. Division 01 Section "Submittal Procedures" for procedures for submitting copies of implementation and termination schedule and utility reports.

© 2012 City of Franklin, Tennessee. All rights reserved.

2. Division 01 Section "Project Management and Coordination" for time constraints of temporary facilities and controls.
3. Division 31 Section "Dewatering" for disposal of ground water at Project site.

1.3 USE CHARGES

A. General: Cost or use charges for temporary facilities are not chargeable to Owner and shall be included in the Contract Sum. Allow other entities to use temporary services and facilities without cost, including, but not limited to, the following:
1. Owner's forces.
2. Occupants of Project.
3. Owner.
4. Testing agencies.
5. Personnel of authorities having jurisdiction.

B. Sewer Service: Pay sewer service use charges for sewer usage, by all parties engaged in construction, at Project site.

C. Water Service: Pay water service use charges for water usage, by all parties engaged in construction at the Project Site.

D. Electric Power Service: Pay electric power service use charges, whether metered or otherwise, for electricity used by all entities engaged in construction activities at Project site.

1.4 SUBMITTALS

A. Temporary Utility Reports: Submit reports of tests, inspections, meter readings, and similar procedures performed on temporary utilities.

1.5 QUALITY ASSURANCE

A. Standards: Comply with ANSI A10.6, NECA's "Temporary Electrical Facilities," and NFPA 241.
1. Trade Jurisdictions: Assigned responsibilities for installation and operation of temporary utilities are not intended to interfere with trade regulations and union jurisdictions.
2. Electric Service: Comply with NECA, NEMA, and UL standards and regulations for temporary electric service. Install service to comply with NFPA 70.

B. Tests and Inspections: Arrange for authorities having jurisdiction to test and inspect each temporary utility before use. Obtain required certifications and permits.

1.6 PROJECT CONDITIONS

A. Temporary Utilities: At earliest feasible time, when acceptable to Owner, change over from use of temporary service to use of permanent service.
1. Temporary Use of Permanent Facilities: Installer of each permanent service shall assume responsibility for operation, maintenance, and protection of each permanent service during its use as a construction facility before Owner's acceptance, regardless of previously assigned responsibilities.

© 2012 City of Franklin, Tennessee. All rights reserved.

B. Conditions of Use: The following conditions apply to use of temporary services and facilities by all parties engaged in the Work:
   1. Keep temporary services and facilities clean and neat.
   2. Relocate temporary services and facilities as required by progress of the Work.

PART 2 - PRODUCTS

2.1 MATERIALS

A. General: Provide new materials. Undamaged, previously used materials in serviceable condition may be used if approved by Owner**.** Provide materials suitable for use intended.

B. Pavement: Comply with the Owner's requirements for temporary and permanent asphalt and concrete pavement.

C. Chain-Link Fencing: Minimum 2-inch(50-mm), 0.148-inch-(3.76-mm-) thick, galvanized steel, chain-link fabric fencing; minimum 6 feet(1.8 m) high with galvanized steel pipe posts; minimum 2-3/8-inch-(60-mm-) OD line posts and 2-7/8-inch-(73-mm-) OD corner and pull posts.

D. Tarpaulins: Fire-resistive labeled with flame-spread rating of 15 or less.

E. Water: Potable.

2.2 EQUIPMENT

A. General: Provide equipment suitable for use intended.

B. Fire Extinguishers: Hand carried, portable, UL rated. Provide class and extinguishing agent as indicated or a combination of extinguishers of NFPA-recommended classes for exposures.
   1. Comply with NFPA 10 and NFPA 241 for classification, extinguishing agent, and size required by location and class of fire exposure.

C. Self-Contained Toilet Units: Single-occupant units of chemical, aerated recirculation or combustion type; vented; fully enclosed with a glass-fiber-reinforced polyester shell or similar nonabsorbent material.

D. Heating Equipment: Provide vented, self-contained, liquid-propane-gas or fuel-oil heaters with individual space thermostatic control.
   1. Use of gasoline-burning space heaters, open-flame heaters, or salamander-type heating units is prohibited.
   2. Heating Units: Listed and labeled, by a testing agency acceptable to authorities having jurisdiction, and marked for intended use for type of fuel being consumed.

E. Electrical Outlets: Properly configured, NEMA-polarized outlets to prevent insertion of 110- to 120-V plugs into higher-voltage outlets; equipped with ground-fault circuit interrupters, reset button, and pilot light.

© 2012 City of Franklin, Tennessee. All rights reserved.

2.3 PROJECT IDENTIFICATION AND SIGNS

A. When project identification and signs are required, construct frame for identification and signs from new wood or galvanized steel.

B. Materials:
   1. Corrugated plastic; for signs larger than 2 feet by 2 feet, mount on exterior grade plywood.
   2. Aluminum; thickness of 0.04 gauge.
   3. Medium Density Overlay Plywood.
   4. Alumanite. ®
   5. Dibond. ®
   6. Lusterboard. ®

PART 3 - EXECUTION

3.1 INSTALLATION, GENERAL

A. Locate facilities where they will serve Project adequately and result in minimum interference with performance of the Work. Relocate and modify facilities as required.

B. Provide each facility ready for use when needed to avoid delay. Maintain and modify as required. Do not remove until facilities are no longer needed or are replaced by authorized use of completed permanent facilities.

C. When project identification and signs are required, install sign within thirty days after Notice to Proceed date.

3.2 TEMPORARY UTILITY INSTALLATION

A. General: Engage appropriate local utility company to install temporary service or connect to existing service. Where utility company provides only part of the service, provide the remainder with matching, compatible materials and equipment. Comply with utility company recommendations.
   1. Arrange with utility company, Owner, and existing users for time when service can be interrupted, if necessary, to make connections for temporary services.
   2. Provide adequate capacity at each stage of construction. Before temporary utility is available, provide trucked-in services.
   3. Obtain easements to bring temporary utilities to Project site where Owner's easements cannot be used for that purpose.

B. Water Service: Use of Owner's existing water service facilities will be permitted, as long as facilities are cleaned and maintained in a condition acceptable to Owner. At Substantial Completion, restore these facilities to condition existing before initial use.

C. Sanitary Facilities: Provide temporary toilets, wash facilities, and drinking-water fixtures. Comply with regulations and health codes for type, number, location, operation, and maintenance of fixtures and facilities.

© 2012 City of Franklin, Tennessee. All rights reserved.

1. Disposable Supplies: Provide toilet tissue, paper towels, paper cups, and similar disposable materials for each facility. Maintain adequate supply. Provide covered waste containers for disposal of used material.
2. Toilets: Install self-contained toilet units. Shield toilets to ensure privacy.

D. Heating and Cooling: Provide temporary heating and cooling required by construction activities for curing or drying of completed installations or for protecting installed construction from adverse effects of low temperatures or high humidity. Select equipment from that specified that will not have a harmful effect on completed installations or elements being installed.

E. Ventilation and Humidity Control: Provide temporary ventilation required by construction activities for curing or drying of completed installations or for protecting installed construction from adverse effects of high humidity. Select equipment from that specified that will not have a harmful effect on completed installations or elements being installed. Coordinate ventilation requirements to produce ambient condition required and minimize energy consumption.

3.3 SUPPORT FACILITIES INSTALLATION

A. General: Comply with the following:
1. Locate field offices, storage sheds, sanitary facilities, and other temporary construction and support facilities for easy access.

B. Traffic Controls: Provide temporary traffic controls at junction of temporary roads with public roads. Include warning signs for public traffic and "STOP" signs for entrance onto public roads. Comply with requirements of authorities having jurisdiction.

C. Project Identification and Signs: Prepare Project identification and other signs in sizes indicated. Install signs where indicated to inform public and persons seeking entrance to Project. Do not permit installation of unauthorized signs.

D. Storage and Fabrication Sheds: Provide sheds sized, furnished, and equipped to accommodate materials and equipment involved, including temporary utility services. Sheds may be open shelters or fully enclosed spaces within building or elsewhere on-site.

3.4 SECURITY AND PROTECTION FACILITIES INSTALLATION

A. Environmental Protection: Provide protection, operate temporary facilities, and conduct construction in ways and by methods that comply with environmental regulations and that minimize possible air, waterway, and subsoil contamination or pollution or other undesirable effects. Avoid using tools and equipment that produce harmful noise. Restrict use of noisemaking tools and equipment to hours that will minimize complaints from persons or firms near Project site.

B. Stormwater Control: Provide earthen embankments, silt fences, check dams, and similar barriers in and around excavations and subgrade construction, sufficient to prevent flooding and siltation by runoff of stormwater from heavy rains. All stormwater controls shall meet the requirements of the City of Franklin Stormwater Best Management Practices Manual and the Tennessee Department of Environment and Conservation.

© 2012 City of Franklin, Tennessee. All rights reserved.

C. Tree and Plant Protection: Install temporary fencing located as indicated or outside the drip line of trees to protect vegetation from construction damage. Protect tree root systems from damage, flooding, and erosion.

D. Security Enclosure and Lockup: Install substantial temporary enclosure around partially completed areas of construction. Provide lockable entrances to prevent unauthorized entrance, vandalism, theft, and similar violations of security.

E. Barricades, Warning Signs, and Lights: Comply with standards and code requirements for erecting structurally adequate barricades. Paint with appropriate colors, graphics, and warning signs to inform personnel and public of possible hazard. Where appropriate and needed, provide lighting, including flashing red or amber lights.

F. Temporary Enclosures: Provide temporary enclosures for protection of construction, in progress and completed, from exposure, foul weather, other construction operations, and similar activities. Provide temporary weathertight enclosure for building exterior.
   1. Where heating or cooling is needed and permanent enclosure is not complete, provide insulated temporary enclosures. Coordinate enclosure with ventilating and material drying or curing requirements to avoid dangerous conditions and effects.
   2. Vertical Openings: Close openings of 25 sq. ft. (2.3 sq. m) or less with plywood or similar materials.
   3. Horizontal Openings: Close openings in floor or roof decks and horizontal surfaces with load-bearing, wood-framed construction.
   4. Install tarpaulins securely using fire-retardant-treated wood framing and other materials.

3.5 OPERATION, TERMINATION, AND REMOVAL

A. Supervision: Enforce strict discipline in use of temporary facilities. To minimize waste and abuse, limit availability of temporary facilities to essential and intended uses.

B. Maintenance: Maintain facilities in good operating condition until removal. Protect from damage caused by freezing temperatures and similar elements.
   1. Maintain operation of temporary enclosures, heating, cooling, humidity control, ventilation, and similar facilities on a 24-hour basis where required to achieve indicated results and to avoid possibility of damage.
   2. Prevent water-filled piping from freezing. Maintain markers for underground lines. Protect from damage during excavation operations.
   3. Repair deterioration and damage to project identification and signs. Keep signs clean.

C. Termination and Removal: Remove each temporary facility when need for its service has ended, when it has been replaced by authorized use of a permanent facility, or no later than Substantial Completion. Complete or, if necessary, restore permanent construction that may have been delayed because of interference with temporary facility. Repair damaged Work, clean exposed surfaces, and replace construction that cannot be satisfactorily repaired.
   1. Materials and facilities that constitute temporary facilities are the property of Contractor. Owner reserves right to take possession of Project identification and signs.

END OF SECTION

© 2012 City of Franklin, Tennessee. All rights reserved.

PRODUCT REQUIREMENTS
Section 01 6000

PART 1 - GENERAL

1.1 RELATED DOCUMENTS

A. Drawings and general provisions of the Contract, including General and Supplementary Conditions and other Division 01 Specification Sections, apply to this Section.

1.2 SUMMARY

A. This Section includes the following administrative and procedural requirements: selection of products for use in Project; product delivery, storage, and handling; manufacturers' standard warranties on products; special warranties; product substitutions; and comparable products.

B. Related Sections include the following:
   1. Division 01 Section "References" for applicable industry standards for products specified.
   2. Division 01 Section "Closeout Procedures" for submitting warranties for contract closeout.

1.3 DEFINITIONS

A. Products: Items purchased for incorporating into the Work, whether purchased for Project or taken from previously purchased stock. The term "product" includes the terms "material," "equipment," "system," and terms of similar intent.
   1. Named Products: Items identified by manufacturer's product name, including make or model number or other designation, shown or listed in manufacturer's published product literature that is current as of date of the Contract Documents.
   2. New Products: Items that have not previously been incorporated into another project or facility. Products salvaged or recycled from other projects are not considered new products.
   3. Comparable Product: Product that is demonstrated and approved through submittal process, or where indicated as a product substitution, to have the indicated qualities related to type, function, dimension, in-service performance, physical properties, appearance, and other characteristics that equal or exceed those of specified product.

B. Substitutions: Changes in products, materials, equipment, and methods of construction from those required by the Contract Documents and proposed by Contractor.

C. Basis-of-Design Product Specification: Where a specific manufacturer's product is named and accompanied by the words "basis of design," including make or model number or other designation, to establish the significant qualities related to type, function, dimension, in-service performance, physical properties, appearance, and other characteristics for purposes of evaluating comparable products of other named manufacturers.

D. Manufacturer's Warranty: Preprinted written warranty published by individual manufacturer for a particular product and specifically endorsed by manufacturer to Owner.

E. Special Warranty: Written warranty required by or incorporated into the Contract Documents, either to extend time limit provided by manufacturer's warranty or to provide more rights for Owner.

© 2012 City of Franklin, Tennessee. All rights reserved.

1.4 SUBMITTALS

A. Product List: Submit a list, in tabular from, showing specified products. Include generic names of products required. Include manufacturer's name and proprietary product names for each product.
   1. Coordinate product list with Contractor's Construction Schedule and the Submittals Schedule.
   2. Completed List: Within 30 days after date of commencement of the Work, submit 3 copies of completed product list. Include a written explanation for omissions of data and for variations from Contract requirements.
   3. Owner's Action: Owner will respond in writing to Contractor within 15 days of receipt of completed product list. Owner's response will include a list of unacceptable product selections and a brief explanation of reasons for this action. Owner's response, or lack of response, does not constitute a waiver of requirement that products comply with the Specifications.

B. Substitution Requests: Submit three copies of each request for consideration. Identify product or fabrication or installation method to be replaced. Include Specification Section number and title and Drawing numbers and titles.
   1. Substitution Request Form: Use form provided in Appendix C. Other forms are not acceptable.
   2. Substitutions will not be considered when indicated on shop drawings or product data submittals.
   3. Substitutions will not be considered unless submitted through the General Contractor.
   4. Additional studies, investigations, submittals, redesign and/or analysis by the Owner caused by requested substitution shall be paid by the Contractor at no expense to the Owner.
   5. Only one request for substitution for each product will be considered. When substitution is not acceptable to Owner, provide specified product.
   6. Owner will determine the acceptability of all substitutions.
   7. Documentation: Show compliance with requirements for substitutions and the following, as applicable:
      a. Statement indicating reason for substitution.
      b. Coordination information, including a list of changes or modifications needed to other parts of the Work and to construction performed by Owner and separate contractors that will be necessary to accommodate proposed substitution.
      c. Detailed comparison of significant qualities of proposed substitution with those of the Work specified. Significant qualities may include attributes such as performance, weight, size, durability, visual effect, and specific features and requirements indicated.
      d. Product Data, including drawings and descriptions of products and fabrication and installation procedures.
      e. Samples, where applicable or requested.
      f. List of similar installations for completed projects with project names and addresses and names and addresses of owners and engineers.
      g. Material test reports from a qualified testing agency indicating and interpreting test results for compliance with requirements indicated.
      h. Detailed comparison of Contractor's Construction Schedule using proposed substitution with products specified for the Work, including effect on the overall Contract Time. If specified product or method of construction cannot be

© 2012 City of Franklin, Tennessee. All rights reserved.

provided within the Contract Time, include letter from manufacturer, on manufacturer's letterhead, stating lack of availability or delays in delivery.

i. Cost information, indicating the difference in cost between specified product(s) and proposed substitution.

j. Contractor's certification that proposed substitution complies with requirements in the Contract Documents and is appropriate for applications indicated.

k. Contractor's waiver of rights to additional payment or time that may subsequently become necessary because of failure of proposed substitution to produce indicated results.

8. Owner's Action: If necessary, Owner will request additional information or documentation for evaluation upon receipt of a request for substitution.

a. Use product specified if Owner is unable to make a decision on use of a proposed substitution within time allocated.

C. Basis-of-Design Product Specification Submittal: Comply with requirements in Division 01 Section "Submittal Procedures." Show compliance with requirements.

1.5 QUALITY ASSURANCE

A. Compatibility of Options: If Contractor is given option of selecting between two or more products for use on Project, product selected shall be compatible with products previously selected, even if previously selected products were also options.

1.6 PRODUCT DELIVERY, STORAGE, AND HANDLING

A. Deliver, store, and handle products using means and methods that will prevent damage, deterioration, and loss, including theft. Comply with manufacturer's written instructions.

1. Schedule delivery to minimize long-term storage at Project site and to prevent overcrowding of construction spaces.
2. Coordinate delivery with installation time to ensure minimum holding time for items that are flammable, hazardous, easily damaged, or sensitive to deterioration, theft, and other losses.
3. Deliver products to Project site in an undamaged condition in manufacturer's original sealed container or other packaging system, complete with labels and instructions for handling, storing, unpacking, protecting, and installing.
4. Inspect products on delivery to ensure compliance with the Contract Documents and to ensure that products are undamaged and properly protected.
5. Store products to allow for inspection and measurement of quantity or counting of units.
6. Store materials in a manner that will not endanger Project structure.
7. Store products that are subject to damage by the elements, under cover in a weathertight enclosure above ground, with ventilation adequate to prevent condensation.
8. Comply with product manufacturer's written instructions for temperature, humidity, ventilation, and weather-protection requirements for storage.
9. Protect stored products from damage.
10. Provide equipment and personnel to handle products by methods to prevent soiling or damage to products or packaging.
11. Provide additional protection during handling as necessary to prevent scraping, marring, or otherwise damaging products or surrounding spaces.
12. Handle products by using methods that will prevent bending or over stressing.
13. Lift heavy components only at designated lifting points.

© 2012 City of Franklin, Tennessee. All rights reserved.

B. Storage: Provide a secure location and enclosure at Project site for storage of materials and equipment by Owner's construction forces. Coordinate location with Owner.

1.7 PRODUCT WARRANTIES

A. Warranties specified in other Sections shall be in addition to, and run concurrent with, other warranties required by the Contract Documents. Manufacturer's disclaimers and limitations on product warranties do not relieve Contractor of obligations under requirements of the Contract Documents.

B. Submittal Time: Comply with requirements in Division 01 Section "Closeout Procedures."

PART 2 - PRODUCTS

2.1 PRODUCT OPTIONS

A. General Product Requirements: Provide products that comply with the Contract Documents, that are undamaged, and unless otherwise indicated, that are new at time of installation.
   1. Provide products complete with accessories, trim, finish, fasteners, and other items needed for a complete installation and indicated use and effect.
   2. Standard Products: If available, and unless custom products or nonstandard options are specified, provide standard products of types that have been produced and used successfully in similar situations on other projects.
   3. Owner reserves the right to limit selection to products with warranties not in conflict with requirements of the Contract Documents.
   4. Where products are accompanied by the term "as selected," Owner will make selection.
   5. Where products are accompanied by the term "match sample," sample to be matched is Owner's.
   6. Descriptive, performance, and reference standard requirements in the Specifications establish "salient characteristics" of products.
   7. Or Equal: Where products are specified by name and accompanied by the term "or equal" or "or approved equal" or "or approved," comply with provisions in "Comparable Products" Article to obtain approval for use of an unnamed product.

B. Product Selection Procedures: Procedures for product selection include the following:
   1. Product: Where Specification paragraphs or subparagraphs titled "Product" name a single product and manufacturer, provide the product named.
   2. Manufacturer/Source: Where Specification paragraphs or subparagraphs titled "Manufacturer" or "Source" name single manufacturers or sources, provide a product by the manufacturer or from the source named that complies with requirements.
   3. Products: Where Specification paragraphs or subparagraphs titled "Products" introduce a list of names of both products and manufacturers, provide one of the products listed that complies with requirements.
   4. Manufacturers: Where Specification paragraphs or subparagraphs titled "Manufacturers" introduce a list of manufacturers' names, provide a product by one of the manufacturers listed that complies with requirements.
   5. Product Options: Where Specification paragraphs titled "Product Options" indicate that size, profiles, and dimensional requirements on Drawings are based on a specific product or system, provide either the specific product or system indicated or a

© 2012 City of Franklin, Tennessee. All rights reserved.

comparable product or system by another manufacturer. Comply with provisions in "Product Substitutions" Article.

6. Basis-of-Design Products: Where Specification paragraphs or subparagraphs titled "Basis-of-Design Products" are included and also introduce or refer to a list of manufacturers' names, provide either the specified product or a comparable product by one of the other named manufacturers. Drawings and Specifications indicate sizes, profiles, dimensions, and other characteristics that are based on the product named. Comply with provisions in "Comparable Products" Article to obtain approval for use of an unnamed product.

2.2 PRODUCT SUBSTITUTIONS

Conditions: Owner will consider Contractor's request for substitution when the following conditions are satisfied. If the following conditions are not satisfied, Owner will return requests without action, except to record noncompliance with these requirements.

1. Requested substitution does not require extensive revisions to the Contract Documents.
2. Requested substitution is consistent with the Contract Documents and will produce indicated results.
3. Substitution request is fully documented and properly submitted.
4. Requested substitution will not adversely affect Contractor's Construction Schedule.
5. Requested substitution has received necessary approvals of authorities having jurisdiction.
6. Requested substitution is compatible with other portions of the Work.
7. Requested substitution has been coordinated with other portions of the Work.
8. Requested substitution provides specified warranty.
9. If requested substitution involves more than one contractor, requested substitution has been coordinated with other portions of the Work, is uniform and consistent, is compatible with other products, and is acceptable to all contractors involved.

2.3 COMPARABLE PRODUCTS

A. Where products or manufacturers are specified by name, submit the following, in addition to other required submittals, to obtain approval of an unnamed product:

1. Evidence that the proposed product does not require extensive revisions to the Contract Documents that it is consistent with the Contract Documents and will produce the indicated results, and is compatible with other portions of the Work.
2. Detailed comparison of significant qualities of proposed product with those named in the Specifications. Significant qualities include attributes such as performance, weight, size, durability, visual effect, and specific features and requirements indicated.
3. Evidence that proposed product provides specified warranty.
4. List of similar installations for completed projects with project names and addresses and names and addresses of owners and engineers, if requested.
5. Samples, if requested.

PART 3 - EXECUTION (Not Used)

END OF SECTION

© 2012 City of Franklin, Tennessee. All rights reserved.

EXECUTION
Section 01 7300

PART 1 - GENERAL

1.1 RELATED DOCUMENTS

A. Drawings and general provisions of the Contract, including General and Supplementary Conditions and other Division 01 Specification Sections, apply to this Section.

1.2 SUMMARY

A. Section includes general administrative and procedural requirements governing execution of the Work including, but not limited to, the following:
   1. Construction layout.
   2. Field engineering and surveying.
   3. Installation of the Work.
   4. Cutting and patching.
   5. Coordination of Owner-installed products.
   6. Progress cleaning.
   7. Starting and adjusting.
   8. Protection of installed construction.
   9. Correction of the Work.

B. Related Sections:
   1. Division 01 Section "Submittal Procedures" for submitting surveys.
   2. Division 01 Section "Closeout Procedures" for submitting final property survey with Project Record Documents, recording of Owner-accepted deviations from indicated lines and levels, and final cleaning.

1.3 DEFINITIONS

A. Cutting: Removal of in-place construction necessary to permit installation or performance of other work.

B. Patching: Fitting and repair work required to restore construction to original conditions after installation of other work.

1.4 QUALITY ASSURANCE

A. Land Surveyor Qualifications: A professional land surveyor who is legally qualified to practice in jurisdiction where Project is located and who is experienced in providing land-surveying services of the kind indicated.

B. Manufacturer's Installation Instructions: Obtain and maintain on-site manufacturer's written recommendations and instructions for installation of products and equipment.

PART 2 - PRODUCTS (Not Used)

© 2012 City of Franklin, Tennessee. All rights reserved.

PART 3 - EXECUTION

3.1 EXAMINATION

A. Existing Conditions: The existence and location of underground and other utilities and construction indicated as existing are not guaranteed. Before beginning sitework, investigate and verify the existence and location of underground utilities and other construction affecting the Work.
   1. Before construction, verify the location and invert elevation at points of connection of sanitary sewer, storm sewer, and water-service piping; underground electrical services, and other utilities.
   2. Furnish location data for work related to Project that must be performed by public utilities serving Project site.

B. Examination and Acceptance of Conditions: Before proceeding with each component of the Work, examine substrates, areas, and conditions, with Installer or Applicator present where indicated, for compliance with requirements for installation tolerances and other conditions affecting performance. Record observations.
   1. Examine roughing-in for mechanical and electrical systems to verify actual locations of connections before equipment and fixture installation.
   2. Examine walls, floors, and roofs for suitable conditions where products and systems are to be installed.
   3. Verify compatibility with and suitability of substrates, including compatibility with existing finishes or primers.

C. Written Report: Where a written report listing conditions detrimental to performance of the Work is required by other Sections, include the following:
   1. Description of the Work.
   2. List of detrimental conditions, including substrates.
   3. List of unacceptable installation tolerances.
   4. Recommended corrections.

D. Proceed with installation only after unsatisfactory conditions have been corrected. Proceeding with the Work indicates acceptance of surfaces and conditions.

3.2 PREPARATION

A. Existing Utility Information: Furnish information to local utility that is necessary to adjust, move, or relocate existing utility structures, utility poles, lines, services, or other utility appurtenances located in or affected by construction. Coordinate with authorities having jurisdiction.

B. Field Measurements: Take field measurements as required to fit the Work properly. Recheck measurements before installing each product. Where portions of the Work are indicated to fit to other construction, verify dimensions of other construction by field measurements before fabrication. Coordinate fabrication schedule with construction progress to avoid delaying the Work.

C. Space Requirements: Verify space requirements and dimensions of items shown diagrammatically on Drawings.

© 2012 City of Franklin, Tennessee. All rights reserved.

D. Review of Contract Documents and Field Conditions: Immediately on discovery of the need for clarification of the Contract Documents caused by differing field conditions outside the control of Contractor, submit a request for information to Owner according to requirements in Division 01 Section "Project Management and Coordination."

3.3 CONSTRUCTION LAYOUT

A. Verification: Before proceeding to lay out the Work, verify layout information shown on Drawings, in relation to the property survey and existing benchmarks. If discrepancies are discovered, notify Owner promptly.

B. General: Engage a land surveyor to lay out the Work using accepted surveying practices.
   1. Establish benchmarks and control points to set lines and levels at each story of construction and elsewhere as needed to locate each element of Project.
   2. Establish limits on use of Project site.
   3. Establish dimensions within tolerances indicated. Do not scale Drawings to obtain required dimensions.
   4. Inform installers of lines and levels to which they must comply.
   5. Check the location, level and plumb, of every major element as the Work progresses.
   6. Notify Owner when deviations from required lines and levels exceed allowable tolerances.
   7. Close site surveys with an error of closure equal to or less than the standard established by authorities having jurisdiction.

C. Site Improvements: Locate and lay out site improvements, including pavements, grading, fill and topsoil placement, utility slopes, and rim and invert elevations.

D. Building Lines and Levels: Locate and lay out control lines and levels for structures, building foundations, column grids, and floor levels, including those required for mechanical and electrical work. Transfer survey markings and elevations for use with control lines and levels. Level foundations and piers from two or more locations.

E. Record Log: Maintain a log of layout control work. Record deviations from required lines and levels. Include beginning and ending dates and times of surveys, weather conditions, name and duty of each survey party member, and types of instruments and tapes used. Make the log available for reference by Owner.

3.4 FIELD ENGINEERING

A. Identification: Owner will identify existing benchmarks, control points, and property corners.

B. Reference Points: Locate existing permanent benchmarks, control points, and similar reference points before beginning the Work. Preserve and protect permanent benchmarks and control points during construction operations.
   1. Do not change or relocate existing benchmarks or control points without prior written approval of Owner. Report lost or destroyed permanent benchmarks or control points promptly. Report the need to relocate permanent benchmarks or control points to Owner before proceeding.
   2. Replace lost or destroyed permanent benchmarks and control points promptly. Base replacements on the original survey control points.

© 2012 City of Franklin, Tennessee. All rights reserved.

C. Benchmarks: Establish and maintain a minimum of two permanent benchmarks on Project site, referenced to data established by survey control points. Comply with authorities having jurisdiction for type and size of benchmark.
   1. Record benchmark locations, with horizontal and vertical data, on Project Record Documents.
   2. Where the actual location or elevation of layout points cannot be marked, provide temporary reference points sufficient to locate the Work.
   3. Remove temporary reference points when no longer needed. Restore marked construction to its original condition.

D. Certified Survey: On completion of foundation walls, major site improvements, and other work requiring field-engineering services, prepare a certified survey showing dimensions, locations, angles, and elevations of construction and sitework.

3.5 INSTALLATION

A. General: Locate the Work and components of the Work accurately, in correct alignment and elevation, as indicated.
   1. Make vertical work plumb and make horizontal work level.
   2. Where space is limited, install components to maximize space available for maintenance and ease of removal for replacement.

B. Comply with manufacturer's written instructions and recommendations for installing products in applications indicated.

C. Install products at the time and under conditions that will ensure the best possible results. Maintain conditions required for product performance until Substantial Completion.

D. Conduct construction operations so no part of the Work is subjected to damaging operations or loading in excess of that expected during normal conditions of occupancy.

E. Tools and Equipment: Do not use tools or equipment that produce harmful noise levels.

F. Templates: Obtain and distribute to the parties involved templates for work specified to be factory prepared and field installed. Check Shop Drawings of other work to confirm that adequate provisions are made for locating and installing products to comply with indicated requirements.

G. Joints: Make joints of uniform width. Where joint locations in exposed work are not indicated, arrange joints for the best visual effect. Fit exposed connections together to form hairline joints.

H. Hazardous Materials: Use products, cleaners, and installation materials that are not considered hazardous.

3.6 PROGRESS CLEANING

A. General: Clean Project site and work areas daily, including common areas. Enforce requirements strictly. Dispose of materials lawfully.
   1. Comply with requirements in NFPA 241 for removal of combustible waste materials and debris.

© 2012 City of Franklin, Tennessee. All rights reserved.

2. Do not hold waste materials more than seven days during normal weather or three days if the temperature is expected to rise above 80 deg F (27 deg C).
3. Containerize hazardous and unsanitary waste materials separately from other waste. Mark containers appropriately and dispose of legally, according to regulations.
   a. Use containers intended for holding waste materials of type to be stored.
4. Coordinate progress cleaning for joint-use areas where more than one installer has worked.

B. Site: Maintain Project site free of waste materials and debris.

C. Work Areas: Clean areas where work is in progress to the level of cleanliness necessary for proper execution of the Work.
   1. Remove liquid spills promptly.
   2. Where dust would impair proper execution of the Work, broom-clean or vacuum the entire work area, as appropriate.

D. Installed Work: Keep installed work clean. Clean installed surfaces according to written instructions of manufacturer or fabricator of product installed, using only cleaning materials specifically recommended. If specific cleaning materials are not recommended, use cleaning materials that are not hazardous to health or property and that will not damage exposed surfaces.

E. Concealed Spaces: Remove debris from concealed spaces before enclosing the space.

F. Exposed Surfaces in Finished Areas: Clean exposed surfaces and protect as necessary to ensure freedom from damage and deterioration at time of Substantial Completion.

G. Waste Disposal: Do not bury or burn waste materials on-site. Do not wash waste materials down sewers or into waterways. Comply with waste disposal requirements in Division 01 Section "Temporary Facilities and Controls."

H. During handling and installation, clean and protect construction in progress and adjoining materials already in place. Apply protective covering where required to ensure protection from damage or deterioration at Substantial Completion.

I. Clean and provide maintenance on completed construction as frequently as necessary through the remainder of the construction period. Adjust and lubricate operable components to ensure operability without damaging effects.

J. Limiting Exposures: Supervise construction operations to assure that no part of the construction, completed or in progress, is subject to harmful, dangerous, damaging, or otherwise deleterious exposure during the construction period.

3.7 PROTECTION OF INSTALLED CONSTRUCTION

A. Provide final protection and maintain conditions that ensure installed Work is without damage or deterioration at time of Substantial Completion.

B. Comply with manufacturer's written instructions for temperature and relative humidity.

© 2012 City of Franklin, Tennessee. All rights reserved.

3.8 CORRECTION OF THE WORK

A. Repair or remove and replace defective construction. Restore damaged substrates and finishes.
   1. Repairing includes replacing defective parts, refinishing damaged surfaces, touching up with matching materials, and property adjusting operating equipment.

B. Restore permanent facilities used during construction to their specified condition.

C. Remove and replace damaged surfaces that are exposed to view if surfaces cannot be repaired without visible evidence of repair.

D. Repair components that do not operate properly. Remove and replace operating components that cannot be repaired.

E. Remove and replace chipped, scratched, and broken glass or reflective surfaces.

END OF SECTION

© 2012 City of Franklin, Tennessee. All rights reserved.

PART 1 - GENERAL

1.1 RELATED DOCUMENTS

A. Drawings and general provisions of the Contract, including General and Supplementary Conditions and other Division 01 Specification Sections, apply to this Section.

1.2 SUMMARY

A. Section includes administrative and procedural requirements for contract closeout, including, but not limited to, the following:
   1. Substantial Completion procedures for City of Franklin (COF)-funded projects.
   2. Final completion procedures.
   3. Warranties.
   4. Final cleaning.
   5. Repair of the Work.

B. Related Requirements:
   1. Division 01 Section "Project Record Documents" for submitting record Drawings, record Specifications, and record Product Data.
   2. Divisions 31 through 33 Sections for specific closeout and special cleaning requirements for the Work in those Sections.

1.3 CLOSEOUT SUBMITTALS

A. Certificates of Release: From authorities having jurisdiction.

B. Certificate of Insurance: For continuing coverage.

1.4 SUBSTANTIAL COMPLETION PROCEDURES FOR COF-FUNDED PROJECTS

A. For completed infrastructure in which future construction is necessary, a bond must be posted to ensure that any damages are addressed.

B. Contractor's List of Incomplete Items: Prepare and submit a list of items to be completed and corrected (Contractor's punch list), indicating the value of each item on the list and reasons why the Work is incomplete.

C. Submittals Prior to Substantial Completion: Complete the following a minimum of 10 working/14 calendar days prior to requesting inspection for determining date of Substantial Completion. List items below that are incomplete at time of request.
   1. Certificates of Release: Obtain and submit releases from authorities having jurisdiction permitting Owner unrestricted use of the Work and access to services and utilities. Include occupancy permits, operating certificates, and similar releases.
   2. Submit closeout submittals specified in other Division 01 Sections, including project record documents, operation and maintenance manuals, Final Completion construction photographic documentation, damage or settlement surveys, property surveys, and similar final record information.
   3. Submit closeout submittals specified in individual Divisions 31 through 33 Sections, including specific warranties, workmanship bonds, maintenance service agreements, final certifications, and similar documents.

© 2012 City of Franklin, Tennessee. All rights reserved.

4. Submit maintenance material submittals specified in individual Divisions 31 through 33 Sections, including tools, spare parts, extra materials, and similar items, and deliver to location designated by Owner. Label with manufacturer's name and model number where applicable.

D. Inspection: Submit a written request for inspection to determine Substantial Completion a minimum of 10 working/14 calendar days prior to date the Work will be completed and ready for final inspection and tests. On receipt of request, Owner will either proceed with inspection or notify Contractor of unfulfilled requirements. Owner will prepare the Certificate of Substantial Completion after inspection or will notify Contractor of items, either on Contractor's list or additional items identified by Owner, that must be completed or corrected before certificate will be issued.
   1. Reinspection: Request reinspection when the Work identified in previous inspections as incomplete is completed or corrected.
   2. Results of completed inspection will form the basis of requirements for Final Completion.

1.5 FINAL COMPLETION PROCEDURES

A. Submittals Prior to Final Completion: Before requesting final inspection for determining Final Completion, complete the following:
   1. Submit a final Application for Payment.
   2. Certified List of Incomplete Items: Submit certified copy of Substantial Completion inspection list of items to be completed or corrected (punch list), endorsed and dated by Owner. Certified copy of the list shall state that each item has been completed or otherwise resolved for acceptance.
   3. Certificate of Insurance: Submit evidence of final, continuing insurance coverage complying with insurance requirements.

B. Inspection: Submit a written request for final inspection to determine acceptance a minimum of 10 working/14 calendar days prior to date the Work will be completed and ready for final inspection and tests. On receipt of request, Owner will either proceed with inspection or notify Contractor of unfulfilled requirements. Owner will prepare a final Certificate for Payment after inspection or will notify Contractor of construction that must be completed or corrected before certificate will be issued.
   1. Reinspection: Request reinspection when the Work identified in previous inspections as incomplete is completed or corrected.

1.6 LIST OF INCOMPLETE ITEMS (PUNCH LIST)

A. Organization of List: Include name and identification of each area affected by construction operations for incomplete items and items needing correction including, if necessary, areas disturbed by Contractor that are outside the limits of construction.
   1. Include the following information at the top of each page:
      a. Project name.
      b. Date.
      c. Name of Engineer.
      d. Name of Contractor.
      e. Page number.

© 2012 City of Franklin, Tennessee. All rights reserved.

1.7 SUBMITTAL OF PROJECT WARRANTIES

A. At a minimum, there shall be a warranty for the Contractor's work and materials.

B. Time of Submittal: Submit written warranties on request of Owner for designated portions of the Work where commencement of warranties other than date of Substantial Completion is indicated, or when delay in submittal of warranties might limit Owner's rights under warranty.

C. Organize warranty documents into an orderly sequence based on the table of contents of Project Manual.

D. Provide additional copies of each warranty to include in operation and maintenance manuals.

1.8 ISSUANCE OF "CERTIFICATE OF ACCEPTANCE"

A. After all deficiencies have been corrected, a "Certificate of Acceptance" shall be issued to the Developer and/or Contractor upon acceptance of the Work by the Owner. The form shall be similar to that presented in Appendix A. The Developer and/or Contractor must also complete the List of New Infrastructure Form found in Appendix B. A minimum one-year warranty period will begin upon the date of acceptance of the project by the Owner. The warranty term may be extended beyond one year as necessary.

1.9 ANNUAL INSPECTION

A. Following acceptance of the project, but prior to bond release or termination of warranty, a follow-up inspection will be made to determine if any failures/deficiencies have occurred as a direct result of the Contractor's work and/or materials. The Developer and/or Contractor will be responsible for correction of all failures/deficiencies that have occurred during the first year after acceptance.

PART 2 - PRODUCTS (Not Used)

PART 3 - EXECUTION

3.1 FINAL CLEANING

A. General: Perform final cleaning. Conduct cleaning and waste-removal operations to comply with local laws and ordinances and Federal and local environmental and antipollution regulations.

1. Complete the following cleaning operations before requesting inspection for certification of Substantial Completion for entire Project or for a designated portion of Project:
   a. Clean Project site, yard, and grounds, in areas disturbed by construction activities, including landscape development areas, of rubbish, waste material, litter, and other foreign substances.
   b. Sweep paved areas broom clean. Remove petrochemical spills, stains, and other foreign deposits.
   c. Rake grounds that are neither planted nor paved to a smooth, even-textured surface.

© 2012 City of Franklin, Tennessee. All rights reserved.

d. Remove tools, construction equipment, machinery, and surplus material from Project site.

3.2 REPAIR OF THE WORK

A. Complete repair and restoration operations before requesting inspection for determination of Substantial Completion.

END OF SECTION

© 2012 City of Franklin, Tennessee. All rights reserved.

PART 1 - GENERAL

1.1 RELATED DOCUMENTS

A. Drawings and general provisions of the Contract, including General and Supplementary Conditions and other Division 01 Specification Sections, apply to this Section.

1.2 SUMMARY

A. Section includes administrative and procedural requirements for project record documents, including the following:
   1. Record Drawings.
   2. Miscellaneous record submittals.

1.3 CLOSEOUT SUBMITTALS

A. Record Drawings: Comply with the following:
   1. Number of Copies: Submit copies of record Drawings as follows:
      a. Final Submittal:
         1) Submit two paper-copy set(s) of marked-up record prints.
         2) Submit *.dwg and *.pdf electronic files.

PART 2 - PRODUCTS

2.1 RECORD DRAWINGS

A. Record Prints: Maintain one set of marked-up paper copies of the Contract Drawings and Shop Drawings, incorporating new and revised drawings as modifications are issued.
   1. Preparation: Mark record prints to show the actual installation where installation varies from that shown originally. Provide an inventory chart of all items.
      a. Give particular attention to information on buried elements that would be difficult to identify or measure and record later.
      b. Accurately record information in an acceptable drawing technique.
      c. Record data as soon as possible after obtaining it.
      d. Record and check the markup before enclosing concealed installations.
      e. Cross-reference record prints to corresponding archive photographic documentation.
   2. Content: Types of items requiring marking include, but are not limited to, the following:
      a. Include inventory of installed infrastructure:
         1) Length and type of pipe (include size, material, etc.).
         2) Number of manholes (include depth, invert, etc.).
         3) Number of valves, hydrants, meters, valve sizes, manufacturer, material, right hand/left hand open/close, etc.
      b. Dimensional changes to Drawings.
      c. Revisions to details shown on Drawings.
      d. Locations and depths of underground utilities.
      e. Datum used.
      f. Revisions to electrical circuitry and conduit (where applicable).

© 2012 City of Franklin, Tennessee. All rights reserved.

g. Changes made by Change Order or Construction Change Directive.
h. Details not on the original Contract Drawings.
i. For Water Booster Stations, Wastewater Lift Stations and Water Storage Facilities:
   1) All revisions in pipe sizes
   2) All revisions to electrical controls
   3) All revisions to ventilation systems
   4) Pump modifications
   5) Include motor and pump info: manufacturer, model, serial #, HP, pump curve, etc.
   6) Changes in elevation for level controls
   7) Equipment layout modifications
   8) Building modifications
   9) Location and elevation of existing utilities
j. For Wastewater Lines:
   1) All revisions in pipe sizes, lengths, slopes and angles
   2) Mainline and lateral invert elevations (to the nearest hundredth)
   3) Manhole covers
   4) Flow lines
   5) Changes in offset distances of structures
   6) Location and elevation of existing utilities
k. Property service connections for sanitary wastewater laterals shall be shown as follows:

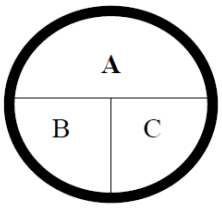

Whereas:
A = The horizontal distance from the center of the wye or tee to the center of the downstream manhole.
B = The horizontal distance from the center of the wye or tee to the end of the lateral.
C = The vertical distance from the top of the ground to the top of the lateral at the plug or property line.

3. Mark the Contract Drawings and Shop Drawings completely and accurately. Use personnel proficient at recording graphic information in production of marked-up record prints.
4. Mark record sets with erasable, red-colored pencil. Use other colors to distinguish between changes for different categories of the Work at same location.
5. Mark important additional information that was either shown schematically or omitted from original Drawings.
6. Note Work Change Directive numbers, alternate numbers, Change Order numbers, and similar identification, where applicable.

B. Record Digital Data Files: Immediately before inspection for Certificate of Substantial Completion, review marked-up record prints with Owner. Prepare a full set of corrected digital data files of the Contract Drawings, as follows:

© 2012 City of Franklin, Tennessee. All rights reserved.

1. Format: *.dwg or *.pdf
2. Incorporate changes and additional information previously marked on record prints. Delete, redraw, and add details and notations where applicable.
3. Refer instances of uncertainty to Owner for resolution.

C. Format: Identify and date each record Drawing; include the designation "PROJECT RECORD DRAWING" in a prominent location. Record drawings must be stamped and signed.
1. Record Prints: Organize record prints and newly prepared record Drawings into manageable sets. Bind each set with durable paper cover sheets. Include identification on cover sheets.
2. Record Digital Data Files: Organize digital data information into separate electronic files that correspond to each sheet of the Contract Drawings. Name each file with the sheet identification. Include identification in each digital data file.
3. Identification: As follows:
   a. Project name.
   b. Date.
   c. Designation "PROJECT RECORD DRAWINGS."

2.2 MISCELLANEOUS RECORD SUBMITTALS

A. Assemble miscellaneous records required by other Specification Sections for miscellaneous record keeping and submittal in connection with actual performance of the Work. Bind or file miscellaneous records and identify each, ready for continued use and reference.

B. Format: Submit miscellaneous record submittals as one paper-copy set and *.pdf electronic file.
1. Include miscellaneous record submittals directory organized by Specification Section number and title, electronically linked to each item of miscellaneous record submittals.

PART 3 - EXECUTION

3.1 RECORDING AND MAINTENANCE

A. Recording: Maintain one copy of each submittal during the construction period for project record document purposes. Post changes and revisions to project record documents as they occur; do not wait until end of Project.

B. Maintenance of Record Documents and Samples: Store record documents and Samples in the field office apart from the Contract Documents used for construction. Do not use project record documents for construction purposes. Maintain record documents in good order and in a clean, dry, legible condition, protected from deterioration and loss. Provide access to project record documents for reference during normal working hours.

END OF SECTION

© 2012 City of Franklin, Tennessee. All rights reserved.

PART 1 - GENERAL

1.1 RELATED DOCUMENTS

A. Drawings and general provisions of the Contract, including General and Supplementary Conditions and other Division 01 Specification Sections, apply to this Section.

1.2 SUMMARY

A. This Section specifies cast-in-place concrete, including reinforcement, concrete materials, mix design, placement procedures, and finishes.

1.3 SUBMITTALS

A. General: In addition to the following, comply with submittal requirements in ACI 301.

B. Product Data: For each type of manufactured material and product indicated.

C. Design Mixes: For each concrete mix.

1.4 QUALITY ASSURANCE

A. Installer Qualifications: An experienced installer who has completed concrete work similar in material, design, and extent to that indicated for this Project and whose work has resulted in construction with a record of successful in-service performance.

B. Manufacturer Qualifications: A firm experienced in manufacturing ready-mixed concrete products complying with ASTM C 94 requirements for production facilities and equipment.

C. Source Limitations: Obtain each type of cement of the same brand from the same manufacturer's plant, each aggregate from one source, and each admixture from the same manufacturer.

D. Comply with ACI 301, "Specification for Structural Concrete," including the following, unless modified by the requirements of the Contract Documents.
   1. General requirements, including submittals, quality assurance, acceptance of structure, and protection of in-place concrete.
   2. Formwork and form accessories.
   3. Steel reinforcement and supports.
   4. Concrete mixtures.
   5. Handling, placing, and constructing concrete.
   6. Lightweight concrete.

PART 2 - PRODUCTS

2.1 FORMWORK

A. Furnish formwork and form accessories according to ACI 301.

© 2012 City of Franklin, Tennessee. All rights reserved.

2.2 STEEL REINFORCEMENT

A. Reinforcing Bars: ASTM A 615/A 615M, Grade 60(Grade 420), deformed.

B. Plain-Steel Welded Wire Fabric: ASTM A 185, fabricated from as-drawn steel wire into flat sheets.

2.3 CONCRETE MATERIALS

A. Portland Cement: ASTM C 150, Type I.

B. Normal-Weight Aggregate: ASTM C 33, uniformly graded, not exceeding 1-1/2-inch (38-mm) nominal size.

C. Lightweight Aggregate: ASTM C 330.

D. Water: Potable and complying with ASTM C 94.

2.4 ADMIXTURES

A. General: Admixtures certified by manufacturer to contain not more than 0.1 percent water-soluble chloride ions by mass of cement and to be compatible with other admixtures. Do not use admixtures containing calcium chloride.

B. Air-Entraining Admixture: ASTM C 260.

2.5 CURING MATERIALS

A. Evaporation Retarder: Waterborne, monomolecular film forming, manufactured for application to fresh concrete.

B. Absorptive Cover: AASHTO M 182, Class 2, burlap cloth made from jute or kenaf, weighing approximately 9 oz. /sq. yd. (305 g/sq. m) dry.

C. Moisture-Retaining Cover: ASTM C 171, polyethylene film or white burlap-polyethylene sheet.

D. Water: Potable.

2.6 CONCRETE MIXES

A. Comply with ACI 301 requirements for concrete mixtures.

B. Prepare design mixes, proportioned according to ACI 301, for normal-weight concrete determined by either laboratory trial mix or field test data bases, as follows:
   1. Compressive Strength (28 Days): 4000 psi (27.6 MPa) vaults, water tank foundations.
   2. Compressive Strength (28 Days): 3500 psi (24.1 MPa) pump station slabs.
   3. Compressive Strength (28 Days): 3000 psi (20.7 MPa) concrete encasement, concrete caps, and concrete anchors for water lines.

© 2011 City of Franklin, Tennessee. All rights reserved.

4. Slump: 4 inches (100 mm).

C. Add air-entraining admixture at manufacturer's prescribed rate to result in concrete at point of placement having an air content of 2.5 to 4.5 percent.

2.7 CONCRETE MIXING

A. Ready-Mixed Concrete: Comply with ASTM C 94.
   1. When air temperature is between 85 and 90 deg F(30 and 32 deg C), reduce mixing and delivery time from 1-1/2 hours to 75 minutes; when air temperature is above 90 deg F(32 deg C), reduce mixing and delivery time to 60 minutes.

PART 3 - EXECUTION

3.1 FORMWORK

A. Design, construct, erect, shore, brace, and maintain formwork according to ACI 301.

3.2 STEEL REINFORCEMENT

A. Comply with CRSI's "Manual of Standard Practice" for fabricating, placing, and supporting reinforcement.
   1. Do not cut or puncture vapor retarder. Repair damage and reseal vapor retarder before placing concrete.

3.3 JOINTS

A. General: Construct joints true to line with faces perpendicular to surface plane of concrete.

B. Construction Joints: Locate and install so as not to impair strength or appearance of concrete, at locations indicated or as approved by Owner.

C. Isolation Joints: Install joint-filler strips at junctions with slabs-on-grade and vertical surfaces, such as column pedestals, foundation walls, grade beams, and other locations, as indicated.
   1. Extend joint fillers full width and depth of joint, terminating flush with finished concrete surface, unless otherwise indicated.

D. Contraction (Control) Joints in Slabs-on-Grade: Form weakened-plane contraction joints, sectioning concrete into areas as indicated. Construct contraction joints for a depth equal to at least one-fourth of the concrete thickness, as follows:
   1. Grooved Joints: Form contraction joints after initial floating by grooving and finishing each edge of joint with groover tool to a radius of 1/8 inch (3 mm). Repeat grooving of contraction joints after applying surface finishes. Eliminate groover marks on concrete surfaces.

3.4 CONCRETE PLACEMENT

A. Comply with recommendations in ACI 304R for measuring, mixing, transporting, and placing concrete.

© 2012 City of Franklin, Tennessee. All rights reserved.

B. Do not add water to concrete during delivery, at Project site, or during placement.

C. Consolidate concrete with mechanical vibrating equipment.

3.5 FINISHING FORMED SURFACES

A. Rough-Formed Finish: As-cast concrete texture imparted by form-facing material with tie holes and defective areas repaired and patched, and fins and other projections exceeding 1/4 inch(6 mm) in height rubbed down or chipped off.
   1. Apply to concrete surfaces not exposed to public view.

B. Smooth-Formed Finish: As-cast concrete texture imparted by form-facing material, arranged in an orderly and symmetrical manner with a minimum of seams. Repair and patch tie holes and defective areas. Completely remove fins and other projections.
   1. Apply to concrete surfaces exposed to public view or to be covered with a coating or covering material applied directly to concrete, such as waterproofing, damp proofing, veneer plaster, or painting.
   2. Apply the following rubbed finish, defined in ACI 301, to smooth-formed finished concrete.
      a. Grout-cleaned finish (for tank foundations).

C. Related Unformed Surfaces: At tops of walls, horizontal offsets, and similar unformed surfaces adjacent to formed surfaces, strike off smooth and finish with a texture matching adjacent formed surfaces. Continue final surface treatment of formed surfaces uniformly across adjacent unformed surfaces, unless otherwise indicated.

3.6 FINISHING UNFORMED SURFACES

A. General: Comply with ACI 302.1R for screening, restraightening, and finishing operations for concrete surfaces. Do not wet concrete surfaces.

B. Screed surfaces with a straightedge and strike off. Begin initial floating using bull floats or derbies to form a uniform and open-textured surface plane before excess moisture or bleed water appears on the surface.
   1. Do not further disturb surfaces before starting finishing operations.

C. Float Finish: Apply float finish to surfaces of slabs that are to be beneath prefabricated pumping stations.

3.7 TOLERANCES

A. Comply with ACI 117, "Specifications for Tolerances for Concrete Construction and Materials."

3.8 CONCRETE PROTECTION AND CURING

A. General: Protect freshly placed concrete from premature drying and excessive cold or hot temperatures. Comply with ACI 306.1 for cold-weather protection, and follow recommendations in ACI 305R for hot-weather protection during curing.

© 2011 City of Franklin, Tennessee. All rights reserved.

B. Evaporation Retarder: Apply evaporation retarder to concrete surfaces if hot, dry, or windy conditions cause moisture loss approaching 0.2 lb/sq. ft. x h(1 kg/sq. m x h) before and during finishing operations. Apply according to manufacturer's written instructions after placing, screening, and bull floating or darbying concrete, but before float finishing.

C. Begin curing after finishing concrete, but not before free water has disappeared from concrete surface.

D. Curing Methods: Cure formed and unformed concrete for at least seven days by moisture curing, moisture-retaining-cover curing, curing compound, or a combination of these as follows:
   1. Moisture Curing: Keep surfaces continuously moist for no less than seven days.
   2. Moisture-Retaining-Cover Curing: Cover concrete surfaces with moisture-retaining cover for curing concrete, placed in widest practicable width, with sides and ends lapped at least 12 inches (300 mm), and sealed by waterproof tape or adhesive. Immediately repair any holes or tears during curing period using cover material and waterproof tape.
   3. Curing Compound: Apply uniformly in continuous operation by power spray or roller according to manufacturer's written instructions. Recoat areas subjected to heavy rainfall within three hours after initial application. Maintain continuity of coating and repair damage during curing period.

3.9 FIELD QUALITY CONTROL

A. Testing Agency: Engage a qualified independent testing and inspecting agency to sample materials, perform tests, and submit test reports during concrete placement according to requirements specified in this Section. Perform tests according to ACI 301.
   1. Testing Frequency: Obtain at least one composite sample for each 100 cu. yd. (76 cu. m) or fraction thereof of each concrete mix placed each day.
   2. Testing not required on concrete for utility line anchors or encasement.

3.10 REPAIRS

A. Remove and replace concrete that does not comply with requirements in this Section.

END OF SECTION

© 2012 City of Franklin, Tennessee. All rights reserved.

PART 1 - GENERAL

1.1 RELATED DOCUMENTS

A. Drawings and general provisions of the Contract, including General and Supplementary Conditions and Division 01 Specification Sections, apply to this Section.

1.2 SUMMARY

A. This Section includes the following:
   1. Excavating and backfilling for structures.
   2. Base course for asphalt paving.
   3. Excavating and backfilling trenches for buried utilities and pits for buried utility structures.

B. Related Sections include the following:
   1. Division 01 Section “General Information and Requirements.”
   2. Division 31 Section "Dewatering" for lowering and disposing of ground water during construction.
   3. Division 31 Section "Excavation Support and Protection."
   4. Division 32 Section "Seeding" for finish grading, including placing and preparing topsoil for lawns and plantings.

1.3 DEFINITIONS

A. Backfill: Materials used to fill an excavation.
   1. Initial Backfill: Backfill placed beside and over pipe in a trench, including haunches to support sides of pipe.
   2. Final Backfill: Backfill placed over initial backfill to fill a trench.

B. Base Course: Layer placed between the subbase course and asphalt paving.

C. Bedding Course: Layer placed over the excavated subgrade in a trench before laying pipe.

D. Borrow: Satisfactory soil imported from off-site for use as fill or backfill.

E. Excavation: Removal of material encountered above subgrade elevations.
   1. Additional Excavation: Excavation below subgrade elevations as directed by Owner. Additional excavation and replacement material will be paid for according to Contract provisions for changes in the Work only if approved by the Owner in writing.
   2. Bulk Excavation: Excavations more than 10 feet (3 m) in width and pits more than 30 feet (9 m) in either length or width.
   3. Unauthorized Excavation: Excavation below subgrade elevations or beyond indicated dimensions without direction by Owner. Unauthorized excavation, as well as remedial work directed by Owner, shall be without additional compensation.

F. Fill: Materials used to raise existing grades.

© 2012 City of Franklin, Tennessee. All rights reserved.

G. Rock: Rock material in beds, ledges, unstratified masses, and conglomerate deposits and boulders of rock material ¾ cu. yd. (0.57 cu.m) or more in volume that cannot be removed by a trackhoe.

H. Structures: Buildings, footings, foundations, retaining walls, slabs, tanks, curbs, mechanical and electrical appurtenances, or other man-made stationary features constructed above or below the ground surface.

I. Subbase Course: Layer placed between the subgrade and base course for asphalt paving, or layer placed between the subgrade and a concrete pavement or walk.

J. Subgrade: Surface or elevation remaining after completing excavation, or top surface of a fill or backfill immediately below subbase, drainage fill, or topsoil materials.

1.4 SUBMITTALS

A. Blasting plan approved by authorities having jurisdiction, for record purposes.

1.5 QUALITY ASSURANCE

A. Comply with applicable requirements of NFPA 495, "Explosive Materials Code."

B. Comply with the "Underground Utilities Damage Prevention Act" (TCA Section 65-31-101, et.seq., as amended).

1.6 EXISTING UTILITIES

A. Utilities include above ground and underground pipes, conduits, ducts, and cables.

B. Existing Utilities: Do not interrupt utilities unless permitted in writing by the utility provider and then only after arranging to provide temporary utility services according to requirements indicated:
   1. Notify the utility provider not less than two days in advance of proposed utility interruptions.
   2. Do not proceed with utility interruptions without the utility provider's written permission.
   3. Contact utility-locator service for area where Project is located before excavating. For projects within the City of Franklin, contact the Water Management Department.

PART 2 - PRODUCTS

2.1 SOIL MATERIALS

A. Satisfactory Soils: ASTM D 2487 soil classification groups GW, GP, GM, SW, SP, and SM, or a combination of these group symbols; free of rock or gravel larger than 3 inches(75 mm) in any dimension, debris, waste, frozen materials, vegetation, and other deleterious matter.

B. Unsatisfactory Soils: ASTM D 2487 soil classification groups GC, SC, ML, MH, CL, CH, OL, OH, and PT, or a combination of these group symbols.

© 2012 City of Franklin, Tennessee. All rights reserved.

1. Unsatisfactory soils also include satisfactory soils not maintained within 2 percent of optimum moisture content at time of compaction.

C. Backfill and Fill: WMD requests that the backfill material for new water lines to be good, sifted soil; if none available, must haul from offsite.

D. Subbase: Naturally or artificially graded mixture of natural or crushed gravel and crushed stone; ASTM D 2940; with at least 90 percent passing a 1-1/2- inch(38-mm) sieve and not more than 12 percent passing a No. 200(0.075-mm) sieve.

E. Base: Naturally or artificially graded mixture of natural or crushed gravel and crushed stone; ASTM D 2940; with at least 95 percent passing a 1-1/2-inch(38-mm) sieve and not more than 8 percent passing a No. 200(0.075-mm) sieve.

F. Bedding: Class B, Natural sandy soil, all of which passes a 3/8-in. (9.5 mm) sieve and not more than 10% passes a No. 200 (.075-mm) sieve.

PART 3 - EXECUTION

3.1 PREPARATION

A. Protect structures, utilities, sidewalks, pavements, and other facilities from damage caused by settlement, lateral movement, undermining, washout, and other hazards created by earthwork operations.

B. Protect subgrades and foundation soils against freezing temperatures or frost. Provide protective insulating materials as necessary.

C. Provide erosion-control measures to prevent erosion or displacement of soils and discharge of soil-bearing water runoff or airborne dust to adjacent properties and walkways.

3.2 DEWATERING

A. Prevent surface water and ground water from entering excavations, from ponding on prepared subgrades, and from flooding Project site and surrounding area.

B. Protect subgrades from softening, undermining, washout, and damage by rain or water accumulation.
   1. Reroute surface water runoff away from excavated areas. Do not allow water to accumulate in excavations. Do not use excavated trenches as temporary drainage ditches.
   2. Install a dewatering system to keep subgrades dry and convey ground water away from excavations. Maintain until dewatering is no longer required.
   3. Meet the requirements of the Tennessee Department of Environment and Conservation (TDEC) and the City of Franklin Stormwater Management Ordinance for stormwater discharge from construction-related activities.

© 2012 City of Franklin, Tennessee. All rights reserved.

3.3 EXPLOSIVES

A. Explosives: Obtain written permission from authorities having jurisdiction before bringing explosives to Project site or using explosives on Project site.
   1. Do not damage adjacent structures, property, or site improvements or weaken the bearing capacity of rock subgrade when using explosives.

3.4 EXCAVATION, GENERAL

A. Unclassified Excavation: Excavation to subgrade elevations regardless of the character of surface and subsurface conditions encountered, including rock, soil materials, and obstructions.
   1. If excavated materials intended for fill and backfill include unsatisfactory soil materials and rock, replace with satisfactory soil materials.

3.5 EXCAVATION FOR STRUCTURES

A. Excavate to indicated elevations and dimensions within a tolerance of plus or minus 1 inch (25 mm). Extend excavations a sufficient distance from structures for placing and removing concrete formwork, for installing services and other construction, and for inspections.

3.6 EXCAVATION FOR WALKS AND PAVEMENTS

A. Excavate surfaces under walks and pavements to indicated cross sections, elevations, and grades.

3.7 EXCAVATION FOR UTILITY TRENCHES

A. Excavate trenches to indicated gradients, lines, depths, and elevations.

B. Excavate trenches to uniform widths to provide a working clearance on each side of pipe or conduit. Trench walls shall be vertical from trench bottom to 12 inches(300 mm) higher than top of pipe or conduit, unless otherwise indicated.
   1. Clearance: See Detail titled Bedding and Backfilling for Pressure Lines.

C. Trench Bottoms: In soil excavate trenches to required elevation. Hand excavate for bell of pipe.
   1. Excavate trenches 6 inches (150 mm) deeper than elevation required in rock or other unyielding bearing material to allow for bedding course.

3.8 STORAGE OF SOIL MATERIALS

A. Stockpile borrow materials and satisfactory excavated soil materials. Comply with the City of Franklin Stormwater Management Ordinance requirements for stockpiles.
   1. Use proper erosion control measures. Temporarily seed if left undisturbed for fifteen (15) days.
   2. Stockpile soil materials without intermixing. Place, grade, and shape stockpiles to drain surface water. Cover to prevent windblown dust.
   3. Stockpile soil materials away from edge of excavations. Do not store within drip line of remaining trees.

© 2012 City of Franklin, Tennessee. All rights reserved.

3.9 BACKFILL

A. Place and compact backfill in excavations promptly, but not before completing the following:
   1. Surveying locations of underground utilities for record documents.
   2. Inspecting underground utilities.
   3. Removing concrete formwork.
   4. Removing trash and debris.
   5. Removing temporary shoring and bracing, and sheeting.

B. Crushed Stone Refill
   1. This item shall include furnishing, placing and installing refill at the locations as directed by the Engineer during construction. This shall also include the removing and disposing of all unsuitable unclassified material necessary to establish satisfactory foundations and install refill. Where use of this material is directed by the Engineer, payment will be made for the cubic yards of material installed. No payment will be allowed for material installed at the Contractor's discretion.
   2. Work to be performed shall include all work necessary for the furnishing and replacing of refill. Crushed Stone refill furnished shall be as specified in Article 2.1 of this Section or other size approved by Engineer.

3.10 UTILITY TRENCH BACKFILL

A. Place and compact bedding course on trench bottoms and where indicated. Shape bedding course to provide continuous support for bells, joints, and barrels of pipes and for joints, fittings, and bodies of conduits.

B. Provide a complete stone backfill for piping within driveways, roadways, and parking areas. If in roadway or paved area, backfill entire trench with No. 67 stone to a height 12 inches below road surface. Final 12 inches shall be filled with compacted road base stone.
   1. Backfill within TDOT right-of-way shall be in accordance with TDOT requirements.

C. Place and compact initial backfill of material, free of particles larger than 2 inches (51 mm), to a height of 12 inches(300 mm) over the utility pipe.
   1. Carefully compact material under pipe haunches and bring backfill evenly up on both sides and along the full length of utility piping to avoid damage or displacement of utility system.

D. Coordinate backfilling with utilities testing.

E. Fill voids with approved backfill materials while shoring and bracing, and as sheeting is removed. Maximum dimension of individual rock in backfill from 12 inches above pipe to top of ground shall not exceed 6 inches.

F. Place and compact final backfill of satisfactory soil material to final subgrade.

G. Whenever excavation has been made within easements on private property, the top one (1) inch of backfill material shall be topsoil material consisting of fine, loose earth, free from large clods, vegetable matter, debris, stone, or other objectionable material.

Whenever existing asphalt is removed, restore traffic over the disturbed area as quickly as possible by backfilling with at least 12 inches of compacted Class A, Grade D crushed stone to

© 2012 City of Franklin, Tennessee. All rights reserved.

within 2 inches of the existing surface and then applying a 2 inch layer of cold mix. Add material and otherwise maintain such surface until the permanent pavement is restored by the Contractor or until acceptance by the Owner.

3.11 MOISTURE CONTROL

A. Uniformly moisten or aerate subgrade and each subsequent fill or backfill layer before compaction to within 2 percent of optimum moisture content.
   1. Do not place backfill or fill material on surfaces that are muddy, frozen, or contain frost or ice.
   2. Remove and replace, or scarify and air-dry, otherwise satisfactory soil material that exceeds optimum moisture content by 2 percent and is too wet to compact to specified dry unit weight.

3.12 COMPACTION OF BACKFILLS AND FILLS

A. Place backfill and fill materials in layers not more than 8 inches(200 mm) in loose depth for material compacted by heavy compaction equipment, and not more than 4 inches(100 mm) in loose depth for material compacted by hand-operated tampers.

B. Compact soil to not less than the following percentages of 95 percent density according to ASTM D 698:
   1. Under pavements, compact each layer of backfill or fill material at 95 percent.
   2. Under walkways, scarify and recompact top 6 inches (150 mm) below subgrade and compact each layer of backfill or fill material at 92 percent.
   3. Under lawn or unpaved areas, scarify and recompact top 6 inches (150 mm) below subgrade and compact each layer of backfill or fill material at 85 percent.
   4. For gravel backfill, vibratory compaction is required.

3.13 GRADING

A. General: Uniformly grade areas to a smooth surface, free from irregular surface changes. Comply with compaction requirements and grade to cross sections, lines, and elevations indicated.
   1. Provide a smooth transition between adjacent existing grades and new grades.
   2. Cut out soft spots, fill low spots, and trim high spots to comply with required surface tolerances.

3.14 SUBBASE AND BASE COURSES

A. Under pavements and walks, place subbase course on prepared subgrade and as follows:
   1. Place base course material over subbase.
   2. Compact subbase and base courses at optimum moisture content to required grades, lines, cross sections, and thickness to not less than 95 percent of maximum dry unit weight according to ASTM D 1557.
   3. For gravel backfill, vibratory compaction is required.
   4. Shape subbase and base to required crown elevations and cross-slope grades.
   5. When thickness of compacted subbase or base course is 6 inches (150 mm) or less, place materials in a single layer.

© 2012 City of Franklin, Tennessee. All rights reserved.

6. When thickness of compacted subbase or base course exceeds 6 inches (150 mm), place materials in equal layers, with no layer more than 6 inches (150 mm) thick or less than 3 inches (75 mm) thick when compacted.

3.15 FIELD QUALITY CONTROL

A. Testing Agency: Contractor will engage a qualified independent geotechnical engineering testing agency to perform field quality-control testing. Contractor to pay for testing services. One copy of the test reports shall be sent to the Owner.

B. Allow testing agency to inspect and test subgrades and each fill or backfill layer. Proceed with subsequent earthwork only after test results for previously completed work comply with requirements.

C. Testing agency will test compaction of soils in place according to ASTM D 1556, ASTM D 2167, ASTM D 2922, and ASTM D 2937, as applicable. Tests will be performed at the following locations and frequencies:
   1. Trench Backfill: At each compacted initial and final backfill layer, at least one test for each 150 feet (46 m) or less of trench length, but no fewer than two tests.

D. When testing agency reports that subgrades, fills, or backfills have not achieved degree of compaction specified, scarify and moisten or aerate, or remove and replace soil to depth required; recompact and retest until specified compaction is obtained.

3.16 PROTECTION

A. Protecting Graded Areas: Protect newly graded areas from traffic, freezing, and erosion. Keep free of trash and debris.

B. Repair and reestablish grades to specified tolerances where completed or partially completed surfaces become eroded, rutted, settled, or where they lose compaction due to subsequent construction operations or weather conditions.
   1. Scarify or remove and replace soil material to depth as directed by Owner; reshape and recompact.

C. Where settling occurs before Project correction period elapses, remove finished surfacing, backfill with additional soil material, compact, and reconstruct surfacing.
   1. Restore appearance, quality, and condition of finished surfacing to match adjacent work, and eliminate evidence of restoration to the greatest extent possible.

3.17 DISPOSAL OF SURPLUS AND WASTE MATERIALS

A. Promptly remove surplus satisfactory soil and waste material, including unsatisfactory soil, trash, and debris from site unless written permission from property owner allows otherwise.

B. Obtain permission from applicable regulatory agency for disposal of debris to waste disposal site.

END OF SECTION

© 2012 City of Franklin, Tennessee. All rights reserved.

PART 1 - GENERAL

1.1 RELATED DOCUMENTS

A. Drawings and general provisions of the Contract, including General and Supplementary Conditions and other Division 01 Specification Sections, apply to this Section.

1.2 SUMMARY

A. This Section includes construction of dewatering systems.

1.3 PERFORMANCE REQUIREMENTS

A. Dewatering Performance: Design, furnish, install, test, operate, monitor, and maintain dewatering system of sufficient scope, size, and capacity to control ground-water flow into excavations and permit construction to proceed on dry, stable subgrades.

1.4 QUALITY ASSURANCE

A. Regulatory Requirements: Comply with water disposal requirements of authorities having jurisdiction.

PART 2 - PRODUCTS (Not Used)

PART 3 - EXECUTION

3.1 PREPARATION

A. Protect structures, utilities, sidewalks, pavements, and other facilities from damage caused by settlement, lateral movement, undermining, washout, and other hazards created by dewatering operations.
   1. Prevent surface water and subsurface or ground water from entering excavations, from ponding on prepared subgrades, and from flooding site and surrounding area.
   2. Protect subgrades and foundation soils from softening and damage by rain or water accumulation.

3.2 INSTALLATION

A. Install dewatering system utilizing wells, well points, or similar methods complete with pump equipment, standby power and pumps, filter material gradation, valves, appurtenances, water disposal, and surface-water controls.

B. Before excavating below ground-water level, place system into operation to lower water to specified levels. Operate system continuously until structures such as drains and sewers have been constructed and fill materials have been placed, or until dewatering is no longer required.

C. Provide an adequate system to lower and control ground water to permit excavation, construction of structures, and placement of fill materials on dry subgrades. Install sufficient dewatering equipment to drain water-bearing strata above and below bottom of foundations, drains, sewers, and other excavations.

© 2012 City of Franklin, Tennessee. All rights reserved.

1. Do not permit open-sump pumping that leads to loss of fines, soil piping, subgrade softening, and slope instability.

D. Reduce hydrostatic head in water-bearing strata below subgrade elevations of foundations, drains, sewers, and other excavations.

E. Dispose of water removed by dewatering in a manner that avoids endangering public health, property, and portions of work under construction or completed. Dispose of water in a manner that avoids inconvenience to others. Provide sumps, sedimentation tanks, and other flow-control devices as required by authorities having jurisdiction.

F. Provide standby equipment on-site, installed and available for immediate operation, to maintain dewatering on continuous basis if any part of system becomes inadequate or fails. If dewatering requirements are not satisfied due to inadequacy or failure of dewatering system, restore damaged structures and foundation soils at no additional expense to Owner.
   1. Remove dewatering system from Project site on completion of dewatering. Plug or fill well holes with sand or cut off and cap wells a minimum of 36 inches (900 mm) below overlying construction.

G. Damages: Promptly repair damages to adjacent facilities caused by dewatering operations.

END OF SECTION

© 2012 City of Franklin, Tennessee. All rights reserved.

PART 1 - GENERAL

1.1 RELATED DOCUMENTS

A. Drawings and general provisions of the Contract, including General and Supplementary Conditions and other Division 01 Specification Sections, apply to this Section.

1.2 SUMMARY

A. This Section includes temporary excavation support and protection systems.

1.3 PERFORMANCE REQUIREMENTS

A. Design, furnish, install, monitor, and maintain excavation support and protection system capable of: supporting excavation sidewalls, resisting soil and hydrostatic pressure, and supporting superimposed and construction loads.
   1. Provide professional engineering services to assume engineering responsibility, including preparation of Shop Drawings and a comprehensive engineering analysis by a qualified professional engineer.

1.4 SUBMITTALS

A. Shop Drawings for Information: Prepared by or under the supervision of a qualified professional engineer for excavation support and protection systems.

1.5 PROJECT CONDITIONS

A. Survey adjacent structures and improvements, employing a qualified professional engineer or land surveyor; establish exact elevations at fixed points to act as benchmarks. Clearly identify benchmarks and record existing elevations.
   1. During installation of excavation support and protection systems, regularly resurvey benchmarks, maintaining an accurate log of surveyed elevations and positions for comparison with original elevations and positions. Promptly notify Owner if changes in elevations or positions occur or if cracks, sags, or other damage is evident in adjacent construction.

PART 2 - PRODUCTS (Not Used)

PART 3 - EXECUTION

3.1 PREPARATION

A. Protect structures, utilities, sidewalks, pavements, and other facilities from damage caused by settlement, lateral movement, undermining, washout, and other hazards that could develop during excavation support and protection system operations.

B. Install excavation support and protection systems to ensure minimum interference with roads, streets, walks, and other adjacent occupied and used facilities.

© 2012 City of Franklin, Tennessee. All rights reserved.

C. Monitor excavation support and protection systems daily during excavation progress and for as long as excavation remains open. Promptly correct bulges, breakage, or other evidence of movement to ensure that excavation support and protection systems remain stable.

D. Promptly repair damages to adjacent facilities caused by installing excavation support and protection systems.

3.2 REMOVAL AND REPAIRS

A. Remove excavation support and protection systems when construction has progressed sufficiently to support excavation and bear soil and hydrostatic pressures. Remove in stages to avoid disturbing underlying soils or damaging structures, pavements, facilities, and utilities.

END OF SECTION

© 2012 City of Franklin, Tennessee. All rights reserved.

CHAIN-LINK FENCES AND GATES
Section 32 3113

PART 1 - GENERAL

1.1 RELATED DOCUMENTS

A. Drawings and general provisions of the Contract, including General and Supplementary Conditions and other Division 01 Specification Sections, apply to this Section.

1.2 SUMMARY

A. This Section includes the following:
   1. Galvanized steel chain-link fabric.
   2. Galvanized steel framework.

1.3 STANDARDS

A. Chain Link Manufacturers Institute.

B. ASTM.

1.4 SUBMITTALS

A. Product Data: For each product indicated.

B. Shop Drawings: Show locations, components, materials, dimensions, sizes, weights, finishes of components, installation and operational clearances, gate swings, and details of post anchorage and attachment and bracing.

1.5 QUALITY ASSURANCE

A. Fencing and all accessories shall be produced by a single manufacturer.

1.6 DELIVERY, STORAGE AND HANDLING

A. Each length of fabric shall be tightly rolled and firmly tied.

B. Each shipment of fabric shall be identified as to the material, color (as applicable), mesh size, height and length of fabric in each roll, ASTM designation, and name or mark of the manufacturer.

C. Store materials in a clean, dry area.

D. Handle materials in accordance with the manufacturer's instructions.

PART 2 - PRODUCTS

2.1 CHAIN-LINK FENCE FABRIC

A. The fabric shall consist of one-piece fabric widths for fences up to 12'-0" in height.

© 2012 City of Franklin, Tennessee. All rights reserved.

B. Steel Chain-Link Fence Fabric: Comply with Chain Link Fence Manufacturers Institute's "Product Manual."
   1. Diamond Mesh and Wire Size: 2-inch(50-mm) mesh, 0.192-inch(4.88-mm) diameter (6 gage).
   2. Zinc-Coated Fabric: ASTM A 392, with zinc coating applied to steel wire mesh fabric after weaving with Class 1, 1.2-oz./sq. ft.(366-g/sq. m) minimum coating weight.

C. Fabric Selvage: Twisted at top selvage and knuckled at bottom.

D. Fabric Height: 8 feet.

2.2 HEAVY DUTY FENCE FRAMING

A. Round Steel Pipe: Standard weight, Schedule 40, galvanized steel pipe complying with ASTM F 1083. ASTM F 1043, Material Design Group IA, external and internal coating Type A, consisting of not less than 1.8-oz./sq. ft.(0.55-kg/sq. m) zinc; and line, end, corner, and pull posts and rails and braces as required for heavy duty fence.

B. Rails and Braces: Top, Intermediate, and Bottom Rails shall be not less than 18 feet in length with swedged end or fitted with couplings for connecting the lengths into a continuous run. Couplings shall allow for expansion and contraction, be not less than 6 inches long, and have minimum wall thickness of 0.070 inches. Open seam outside sleeves shall be permitted only with a minimum wall thickness of 0.100 inches.
   1. Post Brace Rails: Provide brace rail with truss rod assembly for each gate, end, and pull post. Provide two brace rails extending in opposing directions, each with truss rod assembly, for each corner post and for pull posts. Provide rail ends and clamps for attaching rails to posts.
   2. Means shall be provided for attaching rails to each gate, corner, pull, and end post.
   3. Tension wire is required at top of fence if top rail is omitted.

C. Barbed Wire Supporting Arms: Shall be at an angle of approximately 45 degrees or vertical, as required, and shall be fitted with clips or other means for attaching 3 strands of barbed wire. With 45 degree arms, the top wire shall be approximately 12 inches horizontally from the fence line and the other wires spaced uniformly between the top of the fence fabric and the outside strand. Arms shall be capable of supporting a weight of 250 pounds applied at the outer strand of barbed wire.

D. Barbed Wire: Commercial quality steel, 12-1/2 gage line wire, two strand twisted line wire with 4 point, 14 gage barbs at 5 inch spacing. Coating shall consist of a minimum of 0.80 ounces of zinc per square foot of wire surface conforming to ASTM A121 or a minimum of 0.30 ounces of aluminum per square foot of wire surface conforming to ASTM A585.

© 2012 City of Franklin, Tennessee. All rights reserved.

E. Components Dimensions and Weights:

1. Pipe Weight:

Nominal Pipe O.D.	Pipe Weight (lbs/ft) Group IA
1-5/8 inch	2.27
2 inches	2.72
2-1/2 inch	3.65
3 inches	5.79
3-1/2 inch	7.58
4 inches	9.11

2. Fence Post Size:

	Group IA	
Fabric Height	Line Post Nominal O.D.	Terminal Post Nominal O.D.
3 to 5 feet	2 inches	2-1/2 inches
6 to 8 feet	2-1/2 inches	3 inches
10 to 12 feet	3 inches	4 inches

3. Gate Post:

Group IA and IC Post O.D.	Single Gate Width	Double Gate Width
3 inches	Up to 6 feet	Up to 12 feet
4 inches	7 feet to 12 feet	13 feet to 25 feet

2.3 TIES AND CLIPS

A. Ties and/or clips of adequate strength shall be provided for attaching the fence fabric securely to all line posts at intervals not exceeding 15 inches; and not exceeding 24 inches when attaching fabric to rails or tension wire.

1. Stretcher Bar Bands: Heavy pressed steel spaced not over 15 inches on center to secure stretcher bars to tubular end, corner pull, and gate post.
2. Wire Ties: For tying fabric to line posts, use 11 gauge steel wire clips for C-section posts and a minimum 9 gauge aluminum wire ties for tubular posts, spaced 14 inches on center. For tying fabric to rails and braces, use 9 gauge aluminum wire ties spaced 24 inches on center. For tying fabric to tension wire, use 11 gauge hog rings spaced 24 inches on center.

2.4 TENSION BARS

A. Not less than 3/16 inch by 3/4 inch and not less than 2 inches shorter than the normal height of the fence fabric with which they are to be used. One tension bar shall be provided for each end and gate post, and two for each corner and pull post.

2.5 TERMINAL POST BANDS OR CLIPS

A. Provided for attaching the fence fabric and stretcher bars to all terminal posts at intervals not exceeding 15 inches.

1. Galvanized steel or aluminum alloy per ASTM F-626.
2. Formed From Flat or Beveled Steel:

© 2012 City of Franklin, Tennessee. All rights reserved.

a. Minimum thickness of 0.078 inch after galvanizing and minimum width of 3/4 inch for 4 inch O.D. or less posts.
b. Minimum thickness of 0.108 inch after galvanizing and minimum width of 7/8 inch for posts larger than 4 inches O.D.

3. Attachment bolts shall be 5/16 inch galvanized carriage bolts.

2.6 TENSION WIRE AND FITTINGS

A. Metallic-Coated Steel Tension Wire: 7 gage, 0.177-inch-(4.5-mm-) diameter, Marcelled tension wire complying with ASTM A824. Coating shall conform to ASTM A824 Type I, aluminum coated, 0.40 oz/ft^2 or Type II zinc coated Class 2, 1.20 oz/ft^2.

B. Fittings: Provide fittings for a complete fence installation, including special fittings for corners. Comply with ASTM F 626.

2.7 POST TOPS

A. Post Tops: Pressed steel or malleable iron (designed as a weather tight closure cap for tubular posts). Where top rail is used, provide tops to permit the passage of the top rail.

2.8 GATES

A. Swing gates shall conform to ASTM F900.

1. Materials: The base materials of the gate frame shall be round tubular members welded at all corners or assembled with corner fittings. Gates assembled with corner fittings shall have adjustable truss rods 5/16 inch minimum diameter on panels 5 feet wide or wider. Truss rods shall be the same base metal and finish as the gate frames.
   a. The interior bracing, when needed shall be the same metal and shape tubular material and finish as the gate frame, but need not be the same size. Gates leaves shall have vertical interior bracing at maximum intervals of 8 feet and shall have a horizontal interior member if the fabric height is 8 feet or more.
   b. Zinc-coated steel frames shall be in accordance with ASTM Specifications F1043 or F1083, or a combination thereof, and shall match that selected for any adjoining fence framework. Welded joints shall be coated in accordance with Practice A780, employing a zinc-rich paint.
   c. Gate fabric shall be the same type as used in fence construction. The fabric shall be attached securely to the gate frame at intervals not exceeding 15 inches.
   d. Barbed Wire Top: The end members of the gate frame shall be extended 1 foot in height to accommodate three strands of barbed wire. Clips necessary for securing wire shall be provided.
2. Dimensions, Mass, and Permissible Variations:
   a. Size of the gate opening shall be measured from the inside face to inside face of gate posts.
   b. Gate frame shall be designed for the width and built so that the outer members shall not sag in excess of the lesser of 1 percent of the gate leaf width or 2 inches.
3. Gate Accessories: All gate accessories shall be of the materials as specified for the fence.

© 2012 City of Franklin, Tennessee. All rights reserved.

a. Gate Hinges: Hinges shall be structurally capable of supporting the gate leaf and allow the gate to open and close without binding. The hinges shall be so designed to permit the gate to swing a full 180 degrees.
b. Single Gate Latch: Gate latch shall be capable of retaining the gate in a closed position and shall have provision for a padlock.
c. Double Gate Latch: Gate latch shall be a drop rod or plunger bar arranged to engage the gate stop. Locking devices shall be constructed so that the center drop rod or plunger bar cannot be raised when the gate is locked. The latching devices shall have provision for a padlock.
d. Gate Stops: Gate stops shall be provided for all double gates.
e. Keepers shall be provided for each gate leaf over 5 feet.
f. Gates 5 feet and under shall have a self-closing mechanism.

2.9 CAST-IN-PLACE CONCRETE

A. General: Comply with ACI 301 for cast-in-place concrete; materials consisting of portland cement complying with ASTM C 150, aggregates complying with ASTM C 33, and potable water.
1. Concrete Mixes: Normal-weight concrete air entrained with not less than 3000-psi(20.7- MPa) compressive strength (28 days), 3-inch(75-mm) slump, and 1-inch(25-mm) maximum size aggregate.

PART 3 - EXECUTION

3.1 INSTALLATION

A. General: Install chain-link fencing to comply with ASTM F 567 and more stringent requirements indicated. Do not begin installation before final grading is completed, unless otherwise permitted by the Owner. Install all fencing to the limits shown on the drawings.

B. Post Excavation: Drill or hand-excavate holes for posts to diameters, depths, and spacings indicated, in firm, undisturbed or compacted soil.

C. Post Setting:
1. Concrete Footings: Place concrete around posts and vibrate or tamp for consolidation. Trowel smooth the top of each footing at a 20 degrees angle from the post to the surrounding ground so as to shed water away from the post. The post shall extend to the full depth of the footing. Verify that posts are set plumb, aligned, and at correct height and spacing, and hold in position during placement and finishing operations until concrete is sufficiently cured. Set the following post types in concrete footings and protect portion of posts aboveground from concrete splatter:
a. Terminal.
b. Line.
c. Gate.
2. Set all posts with a vertical tolerance of less than 1 inches in 10 feet as measured with a plumb bob.

D. Terminal Posts: Locate terminal end, corner, and gate posts per ASTM F 567 and terminal pull posts at changes in horizontal or vertical alignment greater than 20 degrees.

© 2012 City of Franklin, Tennessee. All rights reserved.

1. Only one end or corner post shall be installed at the junction of different heights of fence and shall be consistent with the largest post required at the junction.

E. Line Posts: Space line posts uniformly at 10 feet(3.05 m) o.c.

F. Intermediate Rails: Install in one piece at post-height center span, spanning between posts, using fittings, special offset fittings, and accessories.

G. Top Rails: Install, spanning between posts, using fittings and accessories.

H. All fences shall have a bottom tension wire attached to the fabric and posts.

I. Chain-Link Fabric: Apply fabric to outside of enclosing framework.

J. Tie Wires: Attach wire to chain-link fabric per ASTM F 626. Tie fabric to line posts at maximum interval of 12 inches(304 mm) o.c. and to braces at maximum interval of 24 inches(609 mm) o.c.

K. Assemble gate frames by welding or fittings and rivets for rigid connections. Install fabric with stretcher bars at vertical edges, and tie at top and bottom edges. Attach stretcher bars to gate frame at not more than 15 inches on center. Attach hardware with rivets or by other means that will provide security against removal or breakage.

L. Gate Installation: Install gates level, plumb, and secure for full opening without interference. Attach hardware using tamper-resistant or concealed means. Install ground-set items in concrete for anchorage. Adjust gate to operate smoothly, easily, and quietly throughout entire operational range. Confirm that latches and locks engage accurately and securely without forcing or binding.

M. All corner, terminal and gate posts for fence 6 feet and higher shall have a mid-rail and 3/8 round adjustable truss rod to the next post.

END OF SECTION

© 2012 City of Franklin, Tennessee. All rights reserved.

PART 1 - GENERAL

1.1 SECTION INCLUDES

A. This work shall be performed in all disturbed areas not receiving such site improvements as buildings, roads, walks, sod, planting, etc., and shall include, but not necessarily be limited to, all seed bed preparation; the supplying and placing of soil additives, seed, and mulch wherever directed by the Owner; and maintenance.

B. Unless otherwise approved in writing by the Owner, seeding operations shall be limited to the following planting periods:
   1. Spring - March 1 through May 30
   2. Fall - August 15 through October 31

C. Refer to other sections for items affecting seeding. Coordinate this work with that specified by other sections for timely execution.

PART 2 - PRODUCTS

2.1 MATERIALS

A. Grass Seed: Kentucky 31 Fescue (Festuca Elatior) and/or annual rye meeting the requirements of the State Department of Agriculture and furnished in new bags or bags that are sound and not mended; no "below standard" seed accepted.

B. Fertilizer: Commercially manufactured; Grade 10-10-10; furnished in standard containers that are clearly marked with the name, weight, and guaranteed analysis of the contents and that ensure proper protection in transportation and handling; and in compliance with all local, state, and federal fertilizer laws.

C. Agricultural Limestone: Containing a minimum of 85 percent calcium carbonate and magnesium carbonate combined, 85 percent of which passes a No. 10 mesh sieve.

D. Mulch: Stalks of rye, oats, wheat, or other approved grain crops properly cured prior to baling, air dried, and reasonably free of noxious weeds and weed seeds or other material detrimental to plant growth.

PART 3 - EXECUTION

3.1 SEEDING

A. Perform all seeding and related work as a continuous operation. Sow seed as soon as the seed bed has been prepared, and perform subsequent work in a continuous manner.

B. Before beginning seeding operations in any area, complete the placing of topsoil and final grading, and have the work approved by the Owner.

© 2012 City of Franklin, Tennessee. All rights reserved.

C. Scarify, disk, harrow, rake, or otherwise work each area to be seeded until the soil has been loosened and pulverized to a depth of not less than 2 inches. Perform this work only when the soil is in a tillable and workable condition.

D. Apply fertilizer and agricultural limestone uniformly over the seed bed, and lightly harrow, rake, or otherwise incorporate them into the soil for a depth of approximately 1 inch at the following rates:
   1. Fertilizer: 40 pounds per 1,000 square feet
   2. Agricultural Limestone: 80 pounds per 1,000 square feet

E. Sow seed uniformly with a rotary seeder, wheelbarrow seeder, or hydraulic equipment or by other satisfactory means.

F. The seeding rate shall be 5 pounds per 1,000 square feet for Kentucky 31 Fescue (Festuca Elatior).

G. When seeding during March 1 through April 1 and October 1 through November 20, add an additional 3 pounds per 1,000 square feet of annual rye grass.

H. Perform no seeding during windy weather or when the ground surface is frozen, wet, or otherwise un-tillable.

I. When seeding with mulch is specified, spread the mulch material evenly over the seeded areas immediately following the seeding operation.
   1. Mulch Rate: 2 bales (100 pound minimum) per 1,000 square feet, depth = 2 inches min.

J. The mulch rate may be varied by the Owner, depending on the texture and condition of the mulch material and the characteristics of the area seeded. Cover all portions of the seeded areas with a uniform layer of mulch so that approximately 25 percent of the ground is visible.
   1. Mulch shall be anchored by a tackifier or crimping.

K. No equipment, material storage, construction traffic, etc., will be permitted on newly seeded ground.

L. Dispose of all surplus materials as directed by the Owner.

3.2 INSPECTIONS

A. The Owner shall inspect the seeding within 14 days after planting and determine if the seeds are germinating and 60 days to determine if the coverage is acceptable.

3.3 GUARANTEES

A. Secure an acceptable growth of grass in all areas designated for seeding.

B. An area is considered acceptable if it is represented by a minimum of 100 seedlings per square foot of the permanent species of grass representative of the seed mixture. If an acceptable growth is not obtained on the first planting, reseeding and re-mulching will be required.

© 2012 City of Franklin, Tennessee. All rights reserved.

C. If the planting is less than 50 percent successful, rework the ground, re-fertilize, reseed and re-mulch.

END OF SECTION

© 2012 City of Franklin, Tennessee. All rights reserved.

PART 1 - GENERAL

1.1 EASEMENTS

A. Water, Wastewater and/or Reclaimed Water Mains: When required, permanent exclusive easements must be provided with a minimum width of 20 feet. Easement width requirements are as follow:

1. 0'-12' depth requires 20' easement.

2. 13'-20' depth requires 30' easement.

3. Depths greater than 20' requires prior approval.

A minimum 10-foot wide temporary construction easement on each side of the permanent easement must also be provided. No trees shall be planted within the permanent easements.

B. Easements for water, wastewater and/or reclaimed water line extensions may be provided in either of two ways.

1. Easement Document on forms provided by the City of Franklin Engineering Department, which must include legal description of the easement(s), legal Owners name, map and parcel, and must be signed by the Owner; and then notarized and recorded.

2. Record with Subdivision Plat - If this method of recording easements is chosen, a preliminary plat of the subdivision must be provided at the time of plans submittal, which clearly defines the easements to be recorded.

C. All easements for work on property not owned by the Developer or Owner must be obtained and recorded before construction can begin. In new subdivisions, the letter of intent and preliminary plat showing the easements will be sufficient to start construction. However, the Final Plat must be recorded and delivered prior to final inspection of the new facilities by the WMD.

D. For developments which require either a water booster station or a sanitary sewer pump station, a parcel of land shall be deeded to the City of Franklin. Plats with descriptions and deeds shall be provided for all pumping stations and access roads to pumping stations.

1.2 ABANDONING UNACCEPTED INFRASTRUCTURE

E. In the event that water, wastewater or reclaimed water infrastructure is constructed but is never accepted by the WMD for a period of twelve (12) months or more, the infrastructure shall be considered abandoned and require re-televising, re-testing, development of a punchlist of any deficiencies and correction of all deficiencies prior to final acceptance, release of performance bonds and allowing any service connections.

END OF SECTION

© 2012 City of Franklin, Tennessee. All rights reserved.

PART 1 - GENERAL

1.1 RELATED DOCUMENTS

A. Drawings and general provisions of the Contract, including General and Supplementary Conditions and other Division 01 Specification Sections, apply to this Section.

1.2 SUMMARY

A. Restoration of existing sanitary sewers by installation of a resin impregnated flexible felt tube into the existing sewer line (from manhole to manhole) utilizing a vertical inversion standpipe and hydrostatic head and curing by circulating hot water or other approved means to produce a hard, impermeable pipe. Reference ASTM F1216-93.

B. The liner shall be cured into a hard, impermeable pipe of the desired thickness, providing a structurally sound, smooth interior, and tight-fitting liner within the existing pipe. The lined pipe shall provide a hydraulic flow equal to or greater than the sewer when it was originally constructed.

C. Related Sections include the following:
1. Division 01 Section "Closeout Procedures."
2. Division 01 Section "Measurement and Payment."
3. Division 31 Section "Excavation Support and Protection."
4. Division 33 Section "Sewer Flow Control."
5. Division 33 Section "Sewer Cleaning."
6. Division 33 Section "Sewer Television Inspection."

1.3 DEFINITIONS/STANDARDS

A. Codes, Specifications, and Standards:
1. Codes, specifications, and standards referred to by number or title shall form a part of this specification to the extent required by the references thereto. Latest revisions shall apply, unless otherwise shown or specified.
2. All pipe materials incorporated in the project shall be approved by the Owner for the application to be used, prior to receipt of bids.

B. American Society for Testing and Materials (ASTM) Standards:
1. D638 – Standard Test Method for Tensile Properties of Plastics.
2. D790 – Standard Test Methods for Flexural Properties of Unreinforced and Reinforced Plastics and Electrical Insulating Materials.
3. D2122 – Standard Test Method for Determining Dimensions of Thermoplastic Pipe and Fittings.
4. D2837 – Standard Test Method for Obtaining Hydrostatic Design Basis for Thermoplastic Pipe Materials or Pressure Design Basis for Thermoplastic Pipe Products.
5. F1216 – Standard Practice for Rehabilitation of Existing Pipelines and Conduits by the Inversion and Curing of a Resin-Impregnated Tube.

© 2012 City of Franklin, Tennessee. All rights reserved.

1.4 SUBMITTALS

A. Contractor Certification: The Contractor shall submit to the Engineer and City of Franklin at least five (5) days before the opening of bids that they have performed similar installations of similar size and length; provide 5 references from other municipalities.

B. Submit the following:
   1. Manufacturer's Certificate of Compliance certifying compliance with the applicable specifications and standards including certified copies of factory test reports.
   2. Manufacturer's installation instructions and procedures.
   3. Contractor's procedures and materials for service renewal including time and duration of sewer service unavailability.
   4. Data, measurements, assumptions and calculations for sizing liners.
   5. Field measurements (diameter, depth, ovalness) at upstream and downstream manholes.
   6. Sampling procedures and locations for obtaining representative samples of the finished liner.
   7. Product data for expanding hydrophilic rubber joint seal.

C. A final certificate of compliance with this specification shall be provided by the manufacturer for all lining material furnished. Tests for compliance by an independent laboratory shall be made according to the applicable ASTM specification and the manufacturer's quality control program.

D. Furnish an extended warranty for liner materials from the Contractor and liner manufacturer for a total of 5 years from date of Final Completion.

1.5 QUALITY ASSURANCE

A. The Contractor shall be familiar with the sewer segments under consideration for lining prior to bidding. The Contractor shall certify in writing as to the applicability of the proposed liner process to each section to be lined.

B. Patents: Contractor shall warrant and indemnify Owner against all claims for patent infringement and any loss thereof.

C. Products must be approved by the State regulatory agency for the application to be used.

1.6 DELIVERY, STORAGE, AND HANDLING

A. The Contractor shall be responsible for the delivery, storage, and handling of products. No products shall be shipped to the job site without the approval of the Resident Project Representative.

B. Products shall be stored in accordance with Manufacturer's recommendations. Promptly remove damaged products from the job site.

PART 2 - PRODUCTS

2.1 GENERAL

© 2012 City of Franklin, Tennessee. All rights reserved.

A. The finished pipe liner in place shall be fabricated from materials which when complete are chemically resistant to and will withstand internal exposure to domestic sewage having a pH range of 5 to 11 and temperatures up to 150ºF.

B. Take all necessary field measurements of the existing pipe (including diameter, ovalness and length) prior to manufacturing liners.

C. The minimum length shall be deemed by the Contractor to effectively span the distance from the inlet to the outlet of the respective manholes unless otherwise specified. The Contractor shall verify the lengths in the field before manufacturing.

2.2 CURED-IN-PLACE LINER

A. Unless specified otherwise, the liner shall be structurally designed for continuous loading conditions; a minimum service life of 50 years; fully deteriorated host pipe/direct bury condition; prism loading; soil loading of 120 PCF; factor of safety of 2.0; 2 percent ovalness; maximum deflection of 5 percent; soil modulus of 1000 psi; lining enhancement factor of 7 maximum; H-20 live loading; 50 percent long-term modulus reduction factor; and hydrostatic load at 27.4 percent of depth to invert; and no bonding to the original pipe wall.
   1. For brick sewers, use 5 percent ovalness or the actual ovalness measured in the field, whichever is greater.

B. All cured-in-place lining products shall comply with ASTM F1216 with minimum finished liner thickness 6mm (except for services).
   1. Calculations which determine wall thickness requirements of the liner shall be submitted to the Owner prior to installation. Calculations shall be prepared by a registered Professional Engineer.

C. The flexible tube shall be fabricated to a size that when installed will neatly fit (minimum 99.75 percent) the internal circumference of the existing sanitary sewer lines (including services as evidenced by indentations). Allowance shall be made for circumferential stretching during insertion so that the final cured product is snug against the wall of the host pipe.

D. Unless otherwise specified, the Contractor shall furnish a general purpose, unsaturated, polyester or thermosetting vinyl ester resin and catalyst system compatible with the reconstruction inversion process that provides cured physical strengths specified herein.

E. The liner shall not be made of a dark or non-reflective material that would inhibit proper closed circuit TV inspection.

2.3 EXPANDING HYDROPHILIC RUBBER JOINT SEAL

A. The rubber joint seal shall be an extended hydrophilic rubber compounded from chloroprene (Neoprene) rubber and a hydrophilic resin, which expands upon contact with water.

B. The rubber joint seal shall be bonded with adhesive on one face to hold it in place during assembly.

© 2012 City of Franklin, Tennessee. All rights reserved.

C. On contact with water, the rubber shall swell up to 8 times its original volume if necessary and mold itself to completely fill any gaps and exert pressure evenly to ensure the seal. High compression or bolt up forces shall not be necessary to affect a complete and watertight seal.

D. The Contractor may propose alternative sealing materials or products in lieu of a hydrophilic rubber joint seal. This is provided the alternative will result in a positive seal between the liner and the existing host sewer pipe to ensure no groundwater tracking through the annulus space into a manhole. Any alternative must be approved by the Engineer and Owner prior to installation.

PART 3 - EXECUTION

3.1 PREPARATION

A. The following installation procedures shall be adhered to unless otherwise approved by the Resident Project Representative.

1. The Contractor shall carry out his operations in strict accordance with all OSHA, TOSHA and manufacturer's safety requirements. Particular attention is drawn to those safety requirements involving entering confined spaces.
2. It shall be the responsibility of the Contractor to remove all internal debris and clean the existing sewer line prior to installation of the liner. Cleaning and disposal of material shall be properly conducted.
   a. The Contractor shall ensure no solids are passed downstream to the next pipe section during the cleaning process.
3. Inspection of existing sewer lines shall be performed by experienced personnel trained in locating breaks, obstacles and service connections by closed circuit television. The interior of the line shall be carefully inspected to determine the location of any conditions that may prevent proper installation of the liner pipe into the lines, and such conditions shall be noted so they can be corrected. A CD-ROM or DVD and suitable log shall be kept for later reference by the Owner as specified in Division 33 Section "Sewer Television Inspection". The television inspection shall be performed in the presence of the Resident Project Representative.
4. The Contractor shall provide for the flow of sewage around the section or sections of pipe designated for lining as specified in Division 33 Section "Sewer Flow Control".
5. The Contractor shall clear the line of obstructions such as solids, dropped joints, protruding service connections or collapsed pipe that will prevent the insertion of the liner pipe, as noted on the Drawings and TV Logs attached. If inspection reveals an obstruction that cannot be removed by conventional sewer cleaning equipment, the Contractor shall make a point repair excavation to uncover and remove or repair the obstruction prior to lining. All materials removed from the sewer line shall be loaded directly on a truck and hauled to an approved disposal site.
   a. Point repairs shall be conducted in accordance with sewer line excavation requirements.
6. The Contractor shall perform necessary point repairs as required or approved by the Owner. Point repairs will be determined based on the television inspection. Point repairs may include, but not be limited to, the following:
   a. Major sags in the host pipe: Major sags identified in the pipe to be lined or replaced will be defined as a section of pipe with an invert below the grade of the sewer line by more than three-fourths the diameter of the sewer line. Repaired sewer line shall be bedded in TDOT No. 57 or No. 67 crushed stone to match the

© 2012 City of Franklin, Tennessee. All rights reserved.

uniform grade of the sewer line from a plane 6 inches below the pipe to 12 inches above the pipe.

b. Concrete encased sewer line: If a section of host pipe is schedule to be replaced by pipe bursting methods and the concrete encasement prohibits construction, a point repair shall be performed by excavating, removing the encasement, installing TDOT No. 7 or No. 57 crushed stone to match the grade of the sewer pipe, and installing the replacement pipe by pipe bursting methods through the excavated area. After the replacement pipe is installed, place TDOT No. 7 or No. 57 crushed stone to a plane 12 inches above the replacement pipe.

c. Offset joints or collapsed pipe in the host pipe to be renovated utilizing CIPP: The point repair shall be made by excavating, removing the damaged section, installing 6-inches minimum of TDOT No. 7 or No. 57 crushed stone to match the uniform grade of the sewer line, replacing the pipe with a section of pipe approved by the Owner and joining the pipe using flexible couplings as approved by the Owner. Complete the point repair by backfilling with TDOT No. 7 or no. 57 crushed stone to a plane 12 inches above the pipe.

7. Hydrophilic rubber joint seals shall be installed around the liner at all manhole connections for all lining products.
8. Ground water temperatures and ambient temperatures shall not be excessive for the product installation procedures.

B. Where practicable, liners can be installed in continuous runs through manholes where there are two or more continuous sewer segments, especially to connect several short segments with a continuous lining. Cut out lining in manholes for access unless otherwise specified by the Owner.

3.2 INSTALLATION

A. Cured-in-Place Liner:
1. Liner installation shall be in accordance with ASTM F-1216.
2. Install hydrophilic rubber joint seal around all liners at all manhole inlet and outlet connections.
3. Seal the area where the line enters or leaves each manhole. Finish the inside of the manhole with a quick set cement grout to raise the invert to the grade of the liner pipe. Also use this grout to dress up around the end of the liner. This space may be sealed with a mechanical seal, chemical seal, or combination of both. The chosen method must be approved by the Owner.
4. If the pipe liner fails to make a tight seal due to broken or misaligned pipe at the manhole wall or other reason, the Contractor shall apply a seal at that point. The seal shall be approved by the Engineer with Owner.
5. The temperature of water discharged to sewer system from processing liners shall not exceed 150°F maximum or level allowed by State or local standards.
6. After the liner has been installed, all active, existing services shall be temporarily reinstated to 90 percent of the original opening. This shall be done without excavation in pavement areas, and in the case of non-man-entry pipes, from the interior of the pipeline by means of a 360° television camera and a cutting device that re-establishes the service connection. When a remote cutting device is used and a cleanout is available, then a mini-camera down the service shall also be used to assist the operator in cutting or trimming.
7. At all points where the liner pipe has been excavated and exposed (e.g., in access shafts, service connections, etc.), prepare for the placement of a crushed stone backfill by removing all debris and creating a void below and around the pipe. The width of this

© 2012 City of Franklin, Tennessee. All rights reserved.

void shall not exceed 4/3 of the liner's outside diameter plus 15 inches, or 4/3 of the service lines outside diameter plus 15 inches. Use a minimum of 6 inches of 1/2 inch to 3/4 inch crushed stone to provide bedding for the liner and service line. Then place a backfill of crushed stone to a height of 12 inches above the liner and service line. Provide the rest of the backfill from 12 inches above the pipe to grade as specified in Division 31 Section "Earthwork." Replace pavement removed during excavation in accordance with the requirements of Franklin Transportation and Street Technical Standards and as applicable.

8. The Contractor shall designate a location where the reconstruction tube will be vacuum impregnated prior to installation. The Contractor shall allow the Owner and/or Engineer to inspect the materials and "wet out" procedure. A catalyst system compatible with the resin and reconstruction tube shall be used. Sufficient excess resin will be provided to insure a mechanical bond with the host pipe after curing.
9. The wet out reconstruction tube shall be inserted through an existing manhole or other approved access by means of an inversion process and the application of a hydrostatic head sufficient to fully extend it to the next designated manhole or termination point. The reconstruction tube shall be inserted into the vertical inversion standpipe with the impermeable plastic membrane side out. At the lower end of the inversion standpipe, the reconstruction tube shall be turned inside out and attached to the standpipe so that a leak-proof seal is created. The inversion head will be adjusted to be of sufficient height to cause the impregnated tube to invert from manhole to manhole and hold the tube tight to the pipe wall, produce dimples at side connections and flared ends at the manholes. The use of a lubricant is recommended. Care shall be taken during the elevated curing temperature so as not to overstress the felt fiber.
10. After inversion is completed the Contractor shall supply a suitable heat source and water recirculation equipment. The equipment shall be capable of delivering hot water throughout the section by means of a pre-strung hose to uniformly raise the water temperature above the temperature required to affect a cure of the resin. This temperature shall be determined by the resin/catalyst system employed.
11. The heat source shall be fitted with suitable monitors to gauge the temperature of the incoming and outgoing water supply. Another such gauge shall be placed between the impregnated reconstruction tube and the pipe invert at the remote manhole to determine the temperatures during cure. Water temperature in the line during the cure period shall be recommended by the resin manufacturer.
12. Initial cure shall be deemed to be completed when inspection of the exposed portions of cured pipe appear to be hard and sound and the remote temperature sensor indicates that the temperature is of a magnitude to realize an exothermic. The cure period shall be of a duration recommended by the resin manufacturer, as modified for the cured-in-place inversion process, during which time the recirculation of the water and cycling of the heat exchanger to maintain the temperature continues.
13. The Contractor shall cool the hardened pipe to a temperature below 100° F before relieving the static head in the inversion standpipe. Cool-down may be accomplished by the introduction of cool water into the inversion standpipe to replace water being drained from a small hole made in the downstream end discharging to the sewer. Care shall be taken in release of the static head so that a vacuum will not be developed that could damage the newly installed pipe.

B. Service Lateral Renewal:
1. Cured-in-Place Liner:
   a. After the new pipe has been cured in place, the Contractor shall reconnect the existing active service connections. This shall generally be done without excavation, and in the case of non-man-entry pipes, from the interior of the pipeline by means of a 360° television camera and a cutting device that

© 2012 City of Franklin, Tennessee. All rights reserved.

reestablishes the service connection. Services shall be re-established to 90 percent or greater of original capacity.

b. The Contractor shall be responsible for determination of active services and their connection to the liner. No payment shall be made for reconnection of inactive services. Damages or fines resulting from failure to reconnect any active service(s) shall be Contractor's responsibility.

3.3 POST INSTALLATION

A. Cured-in-Place Lining:

1. Where liners of any type are installed in two or more continuous manhole segments, the liner invert through the intermediate manholes shall be left intact. Unless otherwise specified by the Owner, final finishing of the installation in those intermediate manholes shall require removal of the top of the exposed liner and neat trimming of the liner edge where it touches the lip of the manhole bench.
2. Portions of any piece of liner material removed during installation shall be available for inspection and retention by the Owner.
3. Reinstate openings for all drop assemblies after relining mainline sewer. All outside drop assemblies shall be lined, unless existing conditions prohibit lining the full length of the drop assembly. The vertical pipe shall be lined, at a minimum. Drop assemblies inside of manholes are not required to be relined, unless directed by the Owner.
4. Each segment lined shall be TV inspected as soon as practical after processing to ensure complete curing or reforming. The lined segment shall also be flushed with water or reclaimed water to ensure there are no sags. Segments not fully conforming to these Specifications must be immediately brought to the Owner's attention with a proposed method of correction. The method of correction shall be acceptable to the Owner. The Contractor shall be required to make the necessary corrections with no additional payment.
5. After defects are corrected, the sewer shall be video recorded again.
6. Television inspection shall be completed before the Work will be considered for Substantial Completion.

3.4 TESTING

A. After cured-in-place installation, perform a test on the sewer line to determine if it is watertight. This shall be done prior to reinstating services.

1. Furnish all necessary equipment to conduct the test. An acceptable method is a low-pressure air test, conducted as follows:
2. Pressurize the test section to 4.0 psi and hold above 3.5 psi for not less than 2 minutes. Add air if necessary to keep the pressure above 3.5 psi. At the end of this 2-minute stabilization period, note the pressure (must be 3.5 psi minimum) and begin the timed period. If the pressure drops 0.5 psi in less than the time given in the table below, the section of pipe shall have failed the test.

Sewer Size Inches	Minimum Test Time/100 ft. (Seconds)
8	72
10	90
12	108
15	126
18	144
21	180

© 2012 City of Franklin, Tennessee. All rights reserved.

Sewer Size Inches	Minimum Test Time/100 ft. (Seconds)
24	216
27	252
30	288

3. When the prevailing groundwater is above the sewer being tested, test pressure shall be increased 0.43 psi for each foot that the water table is above the invert of the sewer.
4. If the time for the pressure to drop 0.5 psi is 125 percent or less of the time given in the table, the line shall immediately be re-pressurized to 3.5 psi and the test repeated.
5. Services reinstated before air test shall be considered part of the pipe to which they are connected and no adjustment of test time shall be allowed.
6. The pressure gage used shall be supplied by the Contractor and have minimum divisions of 0.10 psi and be oil filled.

B. After completing lining and service renewals, every liner shall be TV inspected with a 360° integral light head camera as soon as practical to verify proper installation. The rate of travel shall not exceed 30 feet per minute. At each service, the camera shall come to a complete stop and the service shall be panned. The footage meter count shall be clearly visible. A log for each segment shall be provided indicating the service location and actual address or parcel of each service renewed.

C. The Owner may have an independent testing lab analyze finished liner samples taken from manhole cutoffs, service coupons, etc. Samples shall be furnished directly to the Engineer and Owner within 24 hours (or less) after installation.
1. A minimum of 2 samples shall be taken of the first segment installed.
2. A minimum of 2 samples shall be taken for each 1,200 LF of liner material installed or for each manufacturing lot, if less.
3. A minimum of 6 samples per project shall be taken for each type of liner furnished.
4. Tests in accordance with ASTM standards for Tensile Properties, Flexural Modulus and wall thickness shall be conducted.
5. The Contractor shall determine sampling location and procedures to ensure representative samples are obtained from the finished liner, subject to approval by the Owner.
6. The Contractor shall furnish removable sizing sleeves to collect liner samples which accurately replicate the host pipe diameter.

3.5 ACCEPTANCE

A. It is the intent of these specifications that the completed liner with all appurtenances shall be essentially equivalent in final quality and appearance to new sewer installation.

B. The finished liner shall be continuous over the entire segment between manholes and homogenous throughout.

C. The finished liner shall be fully rounded and as free from visible defects, including but not limited to damage, deflection, holes, delaminating, ridges, cracks, uncured resin, foreign inclusions or other objectionable defects.

© 2012 City of Franklin, Tennessee. All rights reserved.

D. There shall be no visible infiltration through the liner, around the liner at manhole connections, at service connections, in services, or in cleanouts. Contractor shall repair any visible leaks, regardless of the results of leakage testing.

E. Where a defect in the liner requires removal of a section of the liner, in the Owner's opinion, the Contractor shall make all repairs as required by the Owner and shall install a segmental liner, compatible with the liner, to accomplish a continuous finished liner. No separate payment will be made for such defect repair or for the post-repair segmental liner.

F. If an unacceptable crest or sag is determined by the Owner to exist in any portion of the sewer after the completion of the construction, the Contractor shall make the necessary repairs to the sewer to eliminate the problem. If necessary, the Contractor shall excavate the area and restore a uniform slope to the sewer line. Payment will not be made for the repair of the crest or sag in the sewer line.

3.6 CLEAN-UP AND RESTORATION

A. The Contractor shall not allow the site of the Work to become littered with trash and waste material, but shall maintain the site in a neat and orderly condition throughout the construction period.

B. On or before Final Completion, the Contractor shall clean and remove from the site of the Work all surplus and discarded materials, temporary structures, stumps and portions of trees, and debris of any kind. He shall leave the site of Work in a neat and orderly condition, similar or equal to that prior to construction.

C. Upon completion of cleanup and backfill operations and before final acceptance by the Owner, the Contractor shall replace and/or restore any trees, shrubbery, fences, driveways, sidewalks, culverts, bridges, houses or buildings and all water, sewer, gas, telephone and electrical lines thereto, and all other private and public property along or adjacent to the Work that may have been disturbed by construction operations.

D. All private and public property along or adjacent to the Work disturbed by construction operations shall be restored to a condition similar or equal to that existing prior to construction.

E. Before final acceptance by the Owner, the Contractor shall replace and/or restore any water, sewer, drain, and gas lines and appurtenances; electrical, telephone, telegraph conduits and wires, both underground and aboveground, and appurtenances; traffic signals, fire and police alarm systems and appurtenances; sidewalks, curbs, gutter, drainage ditches and pavements and all other public utility facilities and appurtenances along or adjacent to the Work that may have been disturbed by construction operations.

F. Any repairs required because of unsatisfactory backfill operations shall be at the expense of the Contractor.

3.7 PATENTS

A. The Contractor shall warrant and save harmless the Owner and Engineer against all claims for patent infringement and any loss resulting there from.

© 2012 City of Franklin, Tennessee. All rights reserved.

3.8 PRIVATE SERVICE LINE SHUTDOWN

A. When it is necessary to shutdown a private sewer service line while work is in progress and before the service lines are reconnected, the residents are to be notified by the Contractor at least one week prior to the shutdown. No sewer or water service is to remain shutdown for more than a period of eight (8) hours unless the Contractor provides substitute services for the residents. Commercial sewer services shall be maintained at all times that the business is open. No sewage from the services or main line shall be allowed to be discharged on the ground or in waterways. Holding pits or tanks are not allowed unless permitted by TDEC.

3.9 PROSECUTION OF WORK

A. The Contractor shall consult the Owner as to which sewer services are to be renewed. Only those sewer services that are live and active shall be repaired or reinstated after the sewer main has been lined or replaced. Inactive services to vacant parcels shall not be renewed, unless directed by the Owner. The Contractor is responsible for dye testing.

B. The number of service connections on some sewer segments may exceed the number of buildings actually served. The Owner shall inform the Contractor which services are live and require reinstatement prior to commencing lining of the sewer main. Services that are confirmed to be inactive shall not be reconnected. Services that are inactive, but reinstated, shall be plugged at the Contractor's expense.

C. The Contractor shall note that not all sewer lines segments have been televised in their entirety due to obstructions blocking further entry, etc. These obstructions shall be cleared to allow TV viewing of the entire segment length before lining is commenced.

END OF SECTION

© 2012 City of Franklin, Tennessee. All rights reserved.

REHABILITATION OF MANHOLES
Section 33 0133

PART 1 - GENERAL

1.1 RELATED DOCUMENTS

A. Drawings and general provisions of the Contract, including General and Supplementary Conditions and other Division 01 Specification Sections, apply to this Section.

1.2 SUMMARY

A. The Contractor's portion of sanitary sewer manhole rehabilitation shall include:
   1. Rehabilitation of the manhole structure, including manhole chimney, corbel/cone, wall, and base, by sealing with light weight structural reinforced concrete, to improve the structural condition and eliminate infiltration/inflow and improve the surface for a urethane resin lining application.
   2. Replacement of manhole frames and covers for grade adjustment, frame alignment, poor condition, or for inflow elimination.
   3. The inspection and testing of the various types of work to insure compliance.

B. Manholes requiring rehabilitation are identified in the Manhole Rehabilitation Schedule indicated on the Plans. In the instance of a conflict, the Schedule will govern.

C. Related Sections include the following:
   1. Division 33 Section "Sewer Flow Control".

PART 2 - PRODUCTS

2.1 MATERIALS

A. General:
   1. The materials used shall be designed, manufactured and intended for sewer manhole rehabilitation and the specific application in which they are used. The materials shall have a proven history of performance in sewer manhole rehabilitation. The materials shall be delivered to the job site in original unopened packages and clearly labeled with the manufacturer's identification and printed instructions. All materials shall be stored and handled in accordance with recommendations of the manufacturer and the American Concrete Institute. All materials shall be mixed and applied in accordance with the manufacturer's written instructions.

B. Stopping active leaks in concrete and masonry manholes:
   1. A premixed fast-setting, volume-stable waterproof cement plug consisting of hydraulic cement, graded silica aggregates, special plasticizing and accelerating agents. It shall not contain chlorides, gypsum, plasters, iron particles, aluminum powder or gas-forming agents, or promote corrosion of steel it may come in contact with. Set time shall be approximately 1 minute. Ten-minute compressive strength shall be approximately 500 psi.
   2. A siliconate-based liquid accelerator, field mixed with neat Portland cement. The set time shall be approximately 1 minute.
   3. The elastomeric polyurethane resin-soaked method, using dry twisted jute oakum, or resin-rod with polyurethane resin (water activated).

© 2012 City of Franklin, Tennessee. All rights reserved.

C. Spray Applied or Centrifugally Cast Lightweight Structural Reinforced Cement Manhole Lining: (First Course of Manhole Sealing)

1. The material applied to the surface of the manhole (similar to Strong Seal MS-2, Permacast CR-5000, or Quadex QM-1S shall be a cementitious blend of acid resistant binders, siliceous aggregates, non-metallic fibers and other additives for constructing a liner that is impervious to the flow of water, is resistant to sulfide attach, and restores structural integrity to existing manhole walls.
2. A monolithic liner shall be formed which covers all interior manhole surfaces and shall have the following minimum requirements at 28 days:

a.	Compressive Strength (ASTM C-579B)	3000 psi
b.	Tensile Strength (ASTM C-496)	300 psi
c.	Flexural Strength (ASTM C-293) (Modified)	600 psi
d.	Shrinkage (ASTM C-596)	0% at 90% R.H.
e.	Bond (ASTM C-321)	130 psi
f.	Density, when applied	105 ± PCF

D. Urethane Resin Liner (Second Course of Manhole Sealing):

1. The urethane resin-based material shall be used to form the sprayed on/ structural enhanced monolithic liner covering all interior surfaces of the manhole including benches and inverts. The finished liner shall conform to the minimum requirements listed below.

a.	Compressive Strength: ASTM D-695	14,000 psi
b.	Tensile Strength: ASTM D-638	7,000 psi
c.	Shrinkage: ASTM D-2566	1/2 of 1 percent
d.	Flexural Strength: ASTM D-790	13,000 psi
e.	Bond:	Shall exceed tensile strength of substrate
f.	Flexural Modulus: ASTM D-790	735,000 psi
g.	Density:	81 + PCF

2. The finished manholes shall be corrosion-resistant to: Hydrogen Sulfide; 20 percent Sulfuric Acid; 17 percent Nitric Acid; 5 percent Sodium Hydroxide, as well as other common ingredients of the sanitary sewage environment.
3. The wall of the urethane liner will be designed to withstand the hydraulic load generated by the groundwater table. The long term fifty (50) year value of the flexural modulus of the urethane will be an integral part of the engineering equation used to design the wall thickness of the liner.
   a. For this reason, the long term fifty (50) year value of the flexural modulus of the urethane will be verified by third party independent testing and submitted with the design calculations for each individual structure.
   b. The urethane liner shall have a minimum wall thickness of 250 mils. Liner shall be Spray Wall or equal.

E. Hybrid Polymeric Coating System: (Alternate Three Course Manhole Sealing System)

1. The lining system to be utilized shall be a multi-component stress skin panel liner system as described below:

INSTALLATION	LINER
Moisture Barrier	Modified Polymer
Surfacer	Polyurethane/Polymeric Blend Foam
Final Corrosion Barrier	Modified Polymer

© 2012 City of Franklin, Tennessee. All rights reserved.

2. Modified polymer shall be sprayable, solvent free, two-component polymeric, moisture/chemical barrier specifically developed for the corrosive wastewater environment.

TYPICALCHEMICALANAYLSIS

"A"Component	
Viscosity, 77°F, cps	450
Physical State	Liquid
Color	Clear to amber
Hygroscopicity	Reacts with water
"B"Component	
Viscosity, 77°F, cps	500
Physical State	Liquid
Color	Pink
Non-Volatile	100%

TYPICALPHYSICALPROPERTIES

Tensile Strength, psi	>2400
Elongation, %	>300
Tear Strength, PLI	>500
Shore A Hardness	96

3. Polyurethane/Polymeric Rigid Structure Foam, low viscosity two-component.

TYPICALCHEMICALANAYLSIS

"A"Component	
Viscosity, 77°F, cps	200
Physical State	Liquid
Color	Dark Brown
Hygroscopicity	Reacts with water and evolves CO_2 gas
"B"Component	
Viscosity, 77°F, cps	660
Physical State	Liquid
Color	Transparent dark
Hygroscopicity	Absorbs water rapidly

TYPICALPHYSICALPROPERTIES

Density, nominal, core, lbs/ft^3 ASTM D-1622 @ 74°F	4 – 10
Compression Strength, ASTM D-1621 @ 74°F, psi	90 – 150
Closed Cell Content, %	>95
Shear Strength, psi ASTM C-273 @ 74°F	225 - 250

© 2012 City of Franklin, Tennessee. All rights reserved.

4. Total thickness of multi-component stress panel liner shall be a minimum of 500 mils.
5. The products used shall be SpectraShield or Engineer approved equal.

F. The wall of rehabilitated manholes will be designed to withstand the hydraulic load generated by the groundwater table. The long-term (50) year value of the flexural modulus of the cementitious, epoxy, and urethane products will be an integral part of the engineering equation used to design the wall thickness. For this reason, the long-term (50) year value of flexural modulus of the finished product will be verified by third party independent testing and submitted with the design calculations for each individual structure.

1. The following equation shall be used to calculate the required wall thickness within wet wells and manholes:

$$t = D / [(2*K*E_L*C) / \{P*N*(1-v^2)\}]^{1/3}$$

where:
t = thickness of coating in inches
D = mean inside diameter of structure in inches
K = enhancement factor (typically 7)
E_L = long-term flexural modulus of elasticity in psi
C = ovality reduction factor (typically 1 is used for round manholes, wet wells, etc.)
N = factor of safety (typically 2)
P = external ground water buckling pressure in psi (full manhole, wet well, etc. depth in feet / 2.31)
v = Poisson's Ratio (typically 0.3)

PART 3 - EXECUTION

3.1 REHABILITATION OF MANHOLE STRUCTURE

A. Procedures:
1. Safety: The Contractor shall perform all work in strict accordance with all applicable OSHA standards. Particular attention is drawn to those safety requirements regarding confined space entry and respiratory protection from airborne particulate materials during cleaning and product mixing and application.
2. Cleaning: All concrete and masonry surfaces to be rehabilitated shall be clean. All grease, oil, laitance, coatings, loose bricks, mortar, unsound concrete and other foreign materials shall be completely removed. Water blasting utilizing proper nozzles shall be the primary method of cleaning; however, other methods such as wet or dry sandblasting, acid wash, concrete cleaners, degreasers or mechanical means may be required to properly clean the surface. All surfaces on which these other methods are used shall be thoroughly rinsed, scrubbed, and neutralized to remove cleaning agents and their reactant products. Debris resulting from cleaning shall be removed from the manhole and not allowed to be carried downstream.
3. Stopping Infiltration: After surface preparation and prior to the application of mortars and coatings, infiltration shall either be stopped by plugging or chemical grout sealing.
4. Patching: All large holes or voids around steps, joints or pipes, all spalled areas and all holes caused by missing or cracked brick shall be patched and all missing mortar re-pointed using a non-shrink patching mortar. All cracked or disintegrated material shall

© 2012 City of Franklin, Tennessee. All rights reserved.

be removed from the area to be patched or re-pointed, exposing a sound subbase. All cracks not subject to movement and greater than 1/16 inch in width shall be routed out to a minimum width and depth of 1/2 inch and patched with non-shrink patching mortar.

5. Flow Control: The Contractor shall be responsible for plugging or diverting the flow of sewage as needed for repair and lining of manhole inverts and benches. Sewer flow shall be maintained in accordance with Division 33 Section "Sewer flow Control."
6. Remove all loose grout and rubble from existing channel. Rebuild channel if required by reshaping, repairing slope of shelves or benches. Work shall include aligning inflow and outflow ports in such a manner as to prevent the deposition of solids at the transition point. All inverts shall follow the grades of the pipe entering the manhole. Changes in direction of the sewer and entering branch or branches shall have a true curve of as large a radius as the size of the manhole will permit, but will be shaped to allow easy entrance of maintenance equipment including buckets, T.V. camera, etc.
7. Manhole Steps: Existing manhole steps shall be cut and removed prior to lining if they are deteriorated and/or not serviceable as determined by the Owner.
8. Each lining system shall be installed in accordance with the manufacturer's recommendations to withstand groundwater pressures. For manholes greater than 12 feet in depth, the lining shall withstand the pressures associated with a groundwater depth equal to the manhole depth. Linings for all other manholes shall withstand the pressures associated with groundwater depth of 12 feet. Measure groundwater depth from manhole bench to top of ground surface.
9. The manufacturer's recommended lining thickness shall be based on the ability to withstand groundwater pressure.
10. Application of lining products shall be factory certified applicators.

3.2 SPRAY APPLIED LIGHTWEIGHT STRUCTURAL REINFORCEMENT CEMENT (FIRST COURSE OF SEALING MANHOLE)

A. The surface prior to spraying shall be damp without noticeable free water droplets or running water. Materials shall be sprayed applied to a minimum uniform thickness to insure that all cracks, crevices, and voids are filled and a somewhat smooth surface remains after light toweling. The light toweling is performed to compact the material into voids and to set the bond.

B. The first application shall have begun to take an initial set (disappearance of surface sheen which could be 15 minutes to 1 hour depending upon ambient conditions) before the second application to assure a minimum total finished thickness of 1/2 inch. The final finished thickness may need to be greater than 1/2 inch as recommended by the manufacturer to withstand groundwater pressures. A depth gauge shall be used during application, at various locations, to verify the required thickness. The surface then shall be trowel led to smooth finish with care taken not to over trowel so as to bring additional water to the surface and weaken it. Manufacturer's recommendation shall be followed whenever more than 24 hours have elapsed between applications.

C. The bench covers used to catch debris shall be removed and the bench and invert sprayed such that a gradual slope is produced from the walls to the invert with the thickness at the edge of the invert being no less than 1/2 inch. The wall-bench intersection shall be rounded to a uniform radius the full circumference of the intersection.

© 2012 City of Franklin, Tennessee. All rights reserved.

D. No application shall be made to frozen surfaces or if freezing is expected to occur within the manhole for 24 hours after application. If ambient temperatures are in excess of 95°F, precautions shall be taken to keep the mix temperature at time of application below 90°F, using ice if necessary.

E. The final application shall have a minimum of four (4) hours cure time before subjected to actual flow.

3.3 URETHANE RESIN LINER (SECOND COURSE OF MANHOLE SEALING)

A. Application Temperature: No application of liner shall be made unless temperatures inside the manhole is 50 degrees F. or higher.

B. Bench/Invert Repair:
   1. Manhole bench should always be sprayed, but depending on availability and future plans, some judgment consideration will have to be made regarding the invert. Important issue here is the necessity to insure a monolithic system is achieved.
   2. After blocking flow through the manhole and thorough cleaning/ preparatory work has been achieved, the sprayed on urethane shall be applied to the invert; bench and wall areas in the same manner as specified for the liner application below. The spray shall be applied such that the entire manhole is a structurally enhanced monolithic liner. The invert and bench liner thickness shall be the same as that required at the bottom of the manhole walls as determined by the manufacturer's standard engineering calculations for groundwater pressure.
   3. The finished invert surfaces shall be smooth, free of ridges and will be sloped in the direction of flow. Special care shall be used to insure a smooth transition between the new manhole invert and intersecting pipeline inverts such that flow will not be impaired.
   4. The flow through the manhole shall be re-established as soon as practicable and following the liner manufacturer's recommendation for appropriate curing.

C. Liner Application: The urethane shall be manually sprayed onto all surfaces by a trained technician who is experienced in the application of a spray applied urethane resin and has been certified by the manufacturer. Appropriate personal protection equipment shall be utilized.

D. Curing: A minimum of 30 minutes curing time after the completion of spraying shall be allowed before subjecting the manhole to active flow. A minimum of 3 hours curing time or until all sprayed materials have returned to the ambient temperature of the manhole interior shall be allowed before performing the vacuum method test on the manhole. In extremely cool weather, the manhole shall be protected while curing is in progress to maintain temperatures within the range specified in Paragraph 3.3, A., above.

3.4 HYBRID POLYMERIC COATING SYSTEM: (ALTERNATE THREE COURSE MANHOLE SEALING SYSTEM)

A. Application Temperature: No application of coating shall be made unless the temperature inside the manhole is 50° F or higher.

B. Bench/Invert Repair:

© 2012 City of Franklin, Tennessee. All rights reserved.

1. Manhole bench shall be sprayed. The manhole channel shall be sprayed unless a pipe liner has been installed through the manhole.
2. After blocking flow through the manhole and thorough cleaning/ preparatory work has been achieved, the sprayed on coating system shall be applied to the invert, bench, and wall areas in the same manner as specified for the coating application below. The spray shall be applied such that the entire manhole has a monolithic coating that structurally enhances the manhole. The invert and bench coating thickness shall be the same as that required at the bottom of the manhole walls as determined by the manufacturer's standard engineering calculations for groundwater pressure.
3. The finished invert surfaces shall be smooth, free of ridges and sloped in the direction of flow. Special care shall be used to ensure a smooth transition between the new manhole invert and intersecting pipeline inverts such that flow will not be impaired.
4. The flow through the manhole shall be re-established as soon as practicable and following the coating manufacturer's recommendation for appropriate curing.

C. Coating Application: The coating shall be manually sprayed onto all surfaces by a trained technician who is experienced in the application of a spray applied Silicone Modified Polyurea and closed cell Polyurethane foam that has been certified by the manufacturer. Appropriate personal protection equipment shall be utilized.

D. Curing: A minimum of fifteen (15) minutes curing time after the completion of spraying the final corrosion barrier shall be allowed before subjecting the manhole to active flow. A minimum of three (3) hours curing time or until all sprayed materials have returned to the ambient temperature of the manhole interior shall be allowed before performing the vacuum method test on the manhole. In extremely cool weather, the manhole shall be protected while curing is in progress to maintain temperatures within the range specified in Paragraph 3.3, A.

3.5 RESET AND RESEAL MANHOLE FRAME AND COVER, REINSTALLATION OR REPLACEMENT

A. The Contractor shall remove the existing manhole frame and cover and, if they are not being reused, dispose of them as directed by the Owner. It shall be the responsibility of the Contractor, at no additional cost to the Owner, to repair any damage to the chimney or corbel caused by the removal of the existing manhole frame.

B. If the manhole frame is to be raised, a sufficient number of new precast concrete grade rings shall be installed to enable the frame and cover to meet the new grade. The manhole cover may also be raised to meet the grade by installing an approved steel or iron manhole adjusting ring in the top of the existing manhole frame.

C. The manhole frame for the cover shall be set on the manhole sidewall in a full cement mortar bed, at the required elevation. Where manholes are constructed in paved areas or fill slopes, the surface of the frame and cover shall be tilted so as to conform to the exact slope, crown and grade of the existing pavement or area adjacent thereto.

D. Existing frames and covers that are to be reused shall be thoroughly cleaned before reinstallation. The Contractor shall then install the new or reused frames so that the top of the covers are at the required grade in a manner described in paragraph "D" above. An internal frame-chimney seal shall be installed. A flexible seal shall be installed at the manhole frame-sidewall interface. The seal shall remain flexible. The sleeve shall be made from a high

© 2012 City of Franklin, Tennessee. All rights reserved.

quality rubber compound. Field measurements or accurate information, as detailed in the seal manufacturer's recommended procedures, shall be determined to obtain the proper size and shape of the seal.

E. The contact surfaces for the sleeve shall be circular, clean, reasonably smooth, and free of loose material and excessive voids. If the masonry surface is rough or irregular and will not provide an effective seal, it shall be smoothed with mortar. A bed of butyl rubber caulk shall be applied to the sealing surface of the sleeve to fill minor irregularities in the masonry surface. After the sleeve has been placed in proper position, the bands are positioned and individually tightened or expanded as required to provide a watertight seal. Detailed installation instructions shall be in accordance with the manufacturer's instructions.

F. Any new manhole frame and cover replacement shall result in a minimum 24 inches diameter clear opening to the manhole.

3.6 MANHOLE REHABILITATION ACCEPTANCE

A. After the manhole rehabilitation work has been completed, the manhole shall be visually inspected by the Contractor in the presence of the Resident Project Representative and the Work shall be found satisfactory to the Resident Project Representative. Internal manhole frame-chimney seals shall be inspected to insure that the sleeve is tight against the manhole surfaces, that no voids (leakage points) exist under the sleeve and that the bands and locking nuts are tight. In addition, at the Owner's request, the Contractor may be required within two years to visually inspect the manholes that were rehabilitated. Any work that has become defective shall be redone by the Contractor at no additional expense to the Owner.

B. Vacuum Testing:
   1. When the manhole rehabilitation method called for results in sealing, patching or lining the entire inside of a manhole, vacuum testing will be required. This will include stopping active leaks, patching and filling non-leaking holes and cracks, polymer and epoxy coating systems, poured-in-place concrete manhole liners and prefabricated manhole liners.
   2. The Vacuum Testing Method Shall Be Conducted As Follows: All incoming and outgoing sewer and service lines shall be plugged, the plugs restrained and the vacuum tester head placed on the manhole frame and sealed. A vacuum of 10 inches Hg shall then be drawn on the manhole and the time measured for the vacuum to drop to 9 inches Hg. This time shall not be less than 40, 50, or 60 seconds for manhole diameters of 48, 60, and 72 inches respectively. For manholes deeper than 20 feet, the test times shall be increased by 2 seconds per foot of additional manhole depth.
   3. If the manhole or structure fails the vacuum test, the Contractor shall perform additional repairs and repeat the test procedures until satisfactory results are obtained.
   4. After the manhole rehabilitation work has been completed, the manhole shall be visually inspected by the Contractor in the presence of the Resident Project Representative and the work shall be accepted if found satisfactory to the Resident Project Representative. The finished surface shall be free of blisters, “runs” or “sags” or other indications of uneven lining thickness. No evidence of visible leaks shall be allowed. In addition, at the Owner’s request, the Contractor may be required within two years to visually inspect the manholes that were rehabilitated. Any work that has become defective within the two year period shall be redone by the Contractor at no additional expense to the Owner.

© 2012 City of Franklin, Tennessee. All rights reserved.

3.7 CLEAN-UP AND RESTORATION

A. On or before Final Completion, the Contractor shall clean and remove from the site of the Work all surplus and discarded materials leaving the site of Work in a neat and orderly condition, similar or equal to that prior to construction.

B. Before final acceptance by the Owner, the Contractor shall replace and/or restore any trees, shrubbery, fences, driveways, sidewalks, culverts, bridges, houses or buildings and all water, sewer, gas, telephone and electrical lines thereto, and all other private and public property along or adjacent to the Work that may have been disturbed by construction operations. The Contractor shall replace and/or restore any water, sewer, drain, and gas lines and appurtenances; electrical, telephone, telegraph conduits and wires, both underground and aboveground, and appurtenances; traffic signals, fire and police alarm systems and appurtenances; sidewalks, curbs, gutter, drainage ditches and pavements and all other public utility facilities and appurtenances along or adjacent to the Work that may have been disturbed by construction operations

END OF SECTION

© 2012 City of Franklin, Tennessee. All rights reserved.

TRENCHLESS INSTALLATION OF UTILITIES
Section 33 0523

PART 1 - GENERAL

1.1 RELATED DOCUMENTS

A. Drawings and general provisions of the Contract, including General and Supplementary Conditions and Division 01 Sections, apply to this section.

1.2 SUMMARY

A. The work to be performed hereunder consists of trenchless construction methods for the installation of utilities as shown on the Drawings or as identified in these specifications.

B. Work includes excavation of boring and receiving pits (if required), installation of casing pipe (if required), installation of carrier pipe, and backfill requirements.

C. Related Sections include the following:
1. Division 33 Section "Sanitary Sewer (Gravity)."
2. Division 33 Section "Sewage Force Main."

1.3 DEFINITIONS

A. Methods of Trenchless Installation:
1. Bore and Jack (auger boring): A trenchless method that utilizes a rotating cutting head and augers to excavate material along a predetermined alignment. The excavation, generally 6 inches ahead of the casing pipe being jacked simultaneously, occurs by an auger placed within the encasement. The spoil material is removed through the open end of the casing pipe. Pipe diameter range: 12" thru 48"; maximum distance: 300 feet.
2. Directional Drilling: A trenchless method that consists of a multi-stage process to excavate and install a pipeline. A pilot bore is drilled along the predetermined alignment. Drilling fluid is usually injected to minimize friction and prevent collapse of the bore hole. Typically, a radio signal from a transmitter located in the drill bit head indicates depth and alignment. The initial pilot bore can be adjusted by means of hydraulics until it reaches the termination point. The pilot bore is then replaced by a reaming device and pulled back through the initial bore alignment. The pipe material is attached to the reaming device and is pulled into the ground during the back reaming process. Pipe diameter range: 4" thru 72"; maximum distance: 2,000 feet.
3. Microtunneling: A trenchless method similar to the bore and jack method with the exception that it is remotely controlled. The guidance system provides control of the steering head. Stability to the excavation face is provided by applying mechanical or fluid pressure to counterbalance earth and hydrostatic pressures. Pipe diameter range: 12" thru 180"; maximum distance: unlimited.
4. Pipe Ramming: A trenchless method using a pneumatic ramming tool to push a casing pipe through subsurface material, usually soil. The process effectively swallows the subsurface material into the interior of an open-ended casing pipe and is later removed by pneumatic or auger means. Pipe diameter range: 4" thru 80"; maximum distance: 200 feet.
5. Tunneling: A trenchless method requiring hand mining or drilling equipment, such as a tunnel boring machine (TBM), to excavate a predetermined alignment. Liner plates are installed as support for the open area. Tunnel diameter range: 48" thru 192"; maximum distance: unlimited.

© 2012 City of Franklin, Tennessee. All rights reserved.

6. Pipe Bursting: A trenchless method used to replace and upsize existing utilities. The method requires that the utility be temporarily abandoned to conduct work. A cutting head is pulled through the existing pipeline effectively displacing the fragments of the pipeline into the surrounding soil while simultaneously pulling a new pipeline into place behind it. Pipe diameter range: 4" thru 54"; maximum distance: pressure pipe – fitting to fitting; gravity pipe – structure to structure.

B. Carrier Pipe: Utility pipe in excess of 2-inches in diameter.

C. Service Pipes: Utility pipe ranging in diameter from 3/4-inch to 2-inch.

1.4 SUBMITTALS

A. Product Data:
1. Carrier pipe.
2. Casing pipe.
3. Casing spacers.
4. End seals.
5. Liner plates.
6. Tunnel liner grout.
7. Casing and tunnel pipe filler material.
8. Backfill for abandoned casings and tunnels.
9. Utility identification sign.

B. The Contractor shall prepare a schedule for the Work and submit it to the Owner for approval. The schedule shall include all major tasks to be performed including the following:
1. Equipment mobilization and setup.
2. Pipe assembly.
3. Pilot hole drilling (Directional Drilling).
4. Pre-reaming (Directional Drilling).
5. Pre-testing and pigging pipe before installation.
6. Pipe pulling (Directional Drilling).
7. Testing and pigging pipe after reinstallation.
8. Restoration and demobilization.

1.5 QUALITY ASSURANCE

A. The Contractor shall have a representative who is thoroughly knowledgeable of the equipment, boring, and jurisdictional Agency procedures present at the job site during the entire installation and available to address immediate concerns and emergency operations.

B. Provide a record of the advancement of the casing or carrier pipe. The log shall indicate the distance traveled and depth below existing grade over the entire length at 5 foot intervals.

C. Conduct survey of finished work to ensure alignment of casing or carrier pipe is within specified tolerances.

© 2012 City of Franklin, Tennessee. All rights reserved.

D. Provide compaction testing of backfills and embankment, if required, as part of the field quality control for the carrier pipe being constructed. Assure that at least one compaction test site occurs at each pit.

E. Do not remove failed casing, liner plate, or carrier pipe from bore or tunnel alignment. Upon unsuccessful installation of casing or carrier pipe backfill pipe or tunnel per the requirements of Part 2.

F. Provide three copies of complete record drawings for each utility pipeline crossing. Drawings shall include plan view and profile view.

1.6 DELIVERY, STORAGE AND HANDLING

A. Deliver pipe, casing, and accessories to jobsite in accordance with manufacturer's recommendations.

B. Accessory items shall be in manufacturer's original, unopened packaging. Store and protect materials in accordance with manufacturer's recommendations.

PART 2 - PRODUCTS

2.1 CARRIER PIPE

A. The carrier pipe within the casing pipe shall be restrained joint and used to convey water, sewage, or other medium.

B. Refer to Division 33 Sections "Sanitary Sewer (Gravity)" and "Sewage Force Main" for acceptable materials. Refer to project Drawings for material type identification.

2.2 SERVICE PIPE

A. The service pipe within the casing pipe shall be used to convey water, sewage, or other medium.

B. Refer to Division 33 Section "Sanitary Sewer (Gravity)" for service pipe materials. Refer to the Drawings for material type identification.

2.3 CASING PIPE FOR UTILITY PIPELINES

A. The casing pipe or encasement shall be used for structural integrity of the installation and protection of the carrier pipe. In all instances the casing pipe shall have a minimum nominal diameter 4 inches larger than the greatest outside diameter of the carrier pipe, including the pipe bells. Casing pipe is required under local roadways, state roadways, and railways and meet the requirements of TDOT's Design Guidance and the American Railway Engineering and Maintenance of Way Association's Specifications for Pipelines Conveying Flammable and Non-Flammable Substances, current edition.

B. The casing pipe material shall be as noted on the Drawings and as approved by the Agency having jurisdiction over the area being crossed.

© 2012 City of Franklin, Tennessee. All rights reserved.

C. The casing pipe shall be new, welded or seamless steel pipe per ASTM A139, Grade B; ASTM A252, Grade 2; or ASTM A53, Grade B. The steel casing pipe shall have a minimum yield strength of 35,000 psi and shall have a minimum wall thickness as shown in the following table:

TABLE OF MINIMUM THICKNESS FOR STEEL CASING

Casing Pipe Nominal Diameter (in)	Under Highway Wall Thickness (in)	Under Railroad Wall Thickness (in)
6 thru 12	0.250	0.250
14	0.250	0.281
16	0.250	0.281
18	0.250	0.312
20	0.312	0.344
24	0.312	0.406
30	0.375	0.469
36	0.500	0.532
42	0.500	0.625
48	0.625	0.688
54	0.625	0.781
60	0.625	0.844
66	0.625	0.938
72	0.750	1.000

D. When the steel casing pipe is installed without the benefit of a protective coating, the wall thickness should be increased to the nearest standard size, which is a minimum of 0.063 inches greater than the thickness indicated in the Table.

E. For directional drilling applications, and as approved by the agency having jurisdiction, the casing pipe may utilize new, welded or seamless high density polyethylene pipe (HDPE) type DR 11 per ASTM D3350-02.

2.4 CASING PIPE FOR UTILITY SERVICES

A. The casing pipe shall be used for structural integrity of the installation and protection of the service pipe.

B. Utility service casing pipe material shall be new Schedule 40 PVC unless otherwise indicated on the Drawings.

2.5 CASING SPACERS

A. Casing spacers/isolators shall be installed on any carrier pipe passing through a casing pipe or tunnel. They are designed to support and protect the carrier pipe, and electrically isolate the carrier pipe from the casing pipe. Casing spacers are not required when HDPE carrier pipe is used in directional drilling applications that utilize HDPE casing pipe. Casing spacers are not required for service pipe installations.

© 2012 City of Franklin, Tennessee. All rights reserved.

B. Spacing: Number of spacers and distance between spacers are determined by type of pipe used. Recommended spacing for steel carrier pipe is 6ft to 8 ft. Recommended spacing for PVC pipe is 3 spacers per joint.

C. Band: shall be constructed of minimum 14 gauge 304 stainless, two segment. For carrier pipes 42 inch diameter and larger, bands shall be three or more segments and 12 gauge carbon steel.

D. Risers: shall be constructed of minimum 10 gauge high grade 304 stainless steel. Risers shall be sized to position the carrier pipe in the casing, support all loads and provide proper contact for the isolation function.

E. Liner: the casing spacers/isolators shall have a flexible PVC liner of 0.09 inch thickness with a Durometer "A" 85-90 hardness and a minimum 58,000 volt dielectric strength.

F. Runners: the runners shall be of high pressure molded Glass Reinforced Polymer with a minimum compressive strength of 18,000 psi, 2 inch in width and a minimum of 8 inches long. Polyethylene runners are not acceptable. The runners shall be attached to the band or riser by welded stainless steel studs and lock nuts which shall be recessed far below the wearing surface on the runner. The recess shall be filled with a corrosion inhibiting filler.

G. Hardware: the band sections shall be bolted together with 304 stainless steel studs, nuts and washers. Hardware shall be 5/16-inch for pipes up to 42-inch diameter and 3/8-inch for carrier pipes 42-inch and larger.

2.6 END SEALS

A. End seals shall be used to effectively seal the casing pipe to the carrier pipe at each end of the casing pipe prior to backfilling. End seals are not required for service pipe installations.

B. Material: shall be made of 1/8 inch thick synthetic rubber and use stainless steel bands and clamps to secure each end to the casing and carrier pipes.

2.7 LINER PLATES

A. The tunnel liner plate shall be of structural quality, hot-rolled, carbon-steel sheets or plates in conformance with ASTM A1011. The steel liner plate shall have a minimum thickness of 12 gage.

B. The tunnel liner plate submittal should specify either smooth or corrugated, number of flanges, exterior coating, and width of plate.

2.8 TUNNEL LINER GROUT

A. Cement grout shall consist of a uniform mixture of 1:6 (cement: sand). Completely fill all voids using a pumping system. The compressive strength at 28 days shall be a 100 psi, minimum.

2.9 CASING AND TUNNEL PIPE FILLER

© 2012 City of Franklin, Tennessee. All rights reserved.

A. The space between the casing pipe and carrier pipe should not be filled completely to avoid transfer of earth and live loads from the casing to the carrier pipe.

B. Material: fill sand, flowable mortar, or controlled low strength material. Refer to tables for approximate quantities.

C. Compressive strength at 28 days: 100 psi to 200 psi.

TABLE OF QUANTITIES FOR FLOWABLE MORTAR

Material Type	Quantity per cubic yard
Cement	100 lbs
Fly ash	300 lbs
Fine aggregate	2,600 lbs

D. Compressive strength at 28 days: 50 psi.

TABLE OF QUANTITIES FOR CONTROLLED LOW STRENGTH

Material Type	Quantity per cubic yard
Cement	50 lbs
Fly ash	250 lbs
Fine aggregate	2,910 lbs

2.10 BACKFILL FOR ABANDONED CASINGS AND TUNNELS

A. The space between the casing pipe and carrier pipe should be filled completely to avoid settlement of casing due to earth and live loads.

B. Material: 3,000 psi minimum Portland cement concrete, flowable mortar, or controlled low strength material. Refer to tables for approximate quantities.

C. Compressive strength at 28 days: 100 psi to 200 psi.

TABLE OF QUANTITIES FOR FLOWABLE MORTAR

Material Type	Quantity per cubic yard
Cement	100 lbs
Fly ash	300 lbs
Fine aggregate	2,600 lbs

D. Compressive strength at 28 days 50 psi.

TABLE OF QUANTITIES FOR CONTROLLED LOW STRENGTH MATERIAL

Material Type	Quantity per cubic yard
Cement	50 lbs
Fly ash	250 lbs
Fine aggregate	2,910 lbs

© 2012 City of Franklin, Tennessee. All rights reserved.

2.11 UTILITY IDENTIFICATION SIGN

A. Provide a utility identification sign for each end of a casing pipe or tunnel. Provide additional signs as shown on the Drawings.

B. Post: The post shall be constructed of composite material and have dimensions of 66" h x 4" w. The marker post shall be pigmented throughout based upon the utility type.
   1. Water - Blue.
   2. Wastewater - Green.
   3. Reclaimed - Purple.

C. Sign: The post shall have a sign affixed to it. The sign shall be constructed of powder coated steel. The overall dimension of the sign shall be 6-inches by 6-inches. The following information shall be engraved upon the sign:
   1. Warning: "Utility Water/Wastewater/Reclaimed" crossing.
   2. Contact: City of Franklin, Water Management Department.
   3. Phone: 615-794-4554.

D. The marker and sign shall be guaranteed in quality for 15 years against deterioration and discoloring.

PART 3 - EXECUTION

3.1 SCOPE OF WORK

A. The Contractor shall select a method of trenchless installation which is appropriate for anticipated subsurface conditions; will allow the pipe to be installed to the desired line and grade as specified; and will prevent heaving or settlement of the ground surface or damage to nearby facilities.

B. All borings and tunnels shall be accomplished by one of the specified and approved trenchless installation methods; and shall meet the size, line, and grade shown on the Drawings.

C. All trenchless installation work shall be done in accordance with Agencies having jurisdictional authority over the area being crossed. Contractor shall notify the jurisdictional agency 48 hours prior to start of trenchless activities.

D. Locate, mark, and protect existing utilities and facilities in the work area.

E. Trenchless installation of utilities will not be classified by material. If rock is encountered, no additional payment for drilling in rock will be made. Unit price shall include all necessary labor, materials, and equipment necessary to complete the work.

F. Upon unsuccessful installation of casing or carrier pipe based on tolerances stated herein, backfill said pipe or tunnel per the requirements of Part 2 of this Section.

G. Verify suitability of excavated materials for reuse as backfill. Remove and stockpile topsoil for subsequent reuse. Do not mix topsoil with other excavated materials. Remove rock, rubbish, debris, and unsuitable materials. Excavate the minimum size pits necessary to safely and properly perform the work.

© 2012 City of Franklin, Tennessee. All rights reserved.

H. Comply with requirements of Division 31 Sections "Dewatering" and "Excavation Support and Protection" as necessary.

I. Clean up all affected sites and restore all areas to pre-construction or better condition.

3.2 ACCEPTABLE TRENCHLESS INSTALLATION METHODS

A. Bore And Jack (Auger Boring):
   1. Excavate a suitable sized pit to accommodate the equipment. Provide adequate walkway and workspace on each side of the auger and jacking equipment. The Contractor shall furnish and install trench shoring or bracing in compliance with OSHA standards.
   2. Provide continuous pressure to the face of the excavation to balance groundwater and earth pressures.
   3. The carrier pipe shall be furnished by the Contractor. Jack the steel casing pipe into place as the boring proceeds. Ensure that the end of casing is true. Completely weld sections of pipe to provide watertight joints.
   4. Upon acceptance of the casing, install the carrier pipe in the casing by jacking it through the casing. If necessary to achieve proper line and grade on the carrier pipe, use blocking material to offset any minor variations in the alignment of the casing. Otherwise, casing spacers shall be used for all pressure main installations. Spacers shall be installed 1 foot from each end of each pipe joint and at the midpoint of each pipe joint. The carrier pipe shall be restrained by the spacer within the casing.
   5. Both ends of casing pipe shall be sealed with synthetic rubber end seals with stainless steel band and clamps.
   6. Tolerances:
      a. Bore accuracy shall be within ±1% (both horizontally and vertically) of the total borehole length.
      b. The borehole shall follow the design centerline of the pipe profile and alignment described on the Drawings. At no point in the bore will the combined radii in the plan and profile exceed the allowable minimum radius of the pipeline manufacturer.

B. Directional Drilling:
   1. Drilling unit shall be equipped with an electrical strike safety package and shall be tested upon setup of the job.
   2. Drill a pilot bore with the designed tolerances for radius requirements. The pilot bore shall be monitored using instrumentation which will accurately locate the pilot bore positions in the X, Y, and Z axes relative to the ground surface.
   3. The enlargement of the hole to accommodate the carrier pipe shall be accomplished by the ream and pull back method:
      a. Prereaming: Prereaming operating shall be conducted at the discretion of horizontal drilling Contractor. All provisions of this specification relating to simultaneous reaming and pulling back operations shall also pertain to prereaming operations.
      b. Pulling Loads: Contractor shall be responsible for determining safe pulling loads required for proper installation. Such loads shall be minimized as required to prevent failure of the pipeline during installation.

© 2012 City of Franklin, Tennessee. All rights reserved.

c. Torsional Stress: A properly sized and fully operational swivel will be installed between the reaming assembly at the end of the drill pipe, and the pipeline to restrict torsional stress from being transmitted to the pipeline.

d. Pull Section Support: The pull section shall be supported as it proceeds during pull back so that it moves freely and the pipe material is not damaged.

4. Tolerances:

a. A smoothly drilled pilot hole shall follow the design centerline of the pipe profile and alignment described on the Drawings. At no point in the bore will the combined radii in the plan and profile exceed the allowable minimum radius of the pipeline manufacturer.

b. The course of the pilot hole must stay within the given right-of-way at all points along the drilled route. Contractor shall provide and use a separate steering system employing a ground survey grid system, such as "Tru-Tracker".

c. The Contractor shall have accurate working gauges which register the tensile force being used to pull the pipeline back through the reamed borehole. It is the Contractor's responsibility to prepare the reamed out hole such that pulling back operations do not exceed the tensile strength of the pipe. The Contractor shall provide estimated calculations for the pulling loads and allowable loads before pull back operations begin. If during the pipeline pulling process this force exceeds 75 percent of this allowable load for the pipeline, the project inspector must be notified immediately. Logs must be kept intact referencing all forces exerted on the pipeline during pullback.

d. The Contractor shall provide adequate supports along the stringing area to protect the pipe and allow free movement of the pipeline during pullback.

e. During pullback operations, Contractor shall monitor roller operation and use Sidebooms, if required, to assist movement of the pipe. Situations which could cause damage to the pipe material shall be corrected immediately. Damaged pipe shall be repaired to the satisfaction of the Owner or replaced by the Contractor before pulling operations resume.

C. Microtunneling:

1. Excavate suitable sized pits to accommodate the tunneling equipment at entrance and exit of proposed microtunnel bore. The Contractor shall furnish and install trench shoring or bracing in compliance with OSHA standards.

2. Excavate the tunnel using a steerable, laser guided tunnel boring machine remotely controlled and monitored from the surface by the operator at all times. Functions of the system to be monitored at the remote console shall include rate of advance, length of conduit installed, thrust force, deviation from line and grade, roll, inclination, and valve positions.

3. Excavation of tunnel shall take place within the tunneling shield. Personnel should not enter the excavation. The tunnel shield shall be full faced with the capability of supporting the face both during excavation and during shutdown. When soil conditions dictate, the tunnel shield must be capable of removing cobbles and boulders. The excavation system shall be fully capable of excavating all material that it will encounter.

4. The jacking system, including any intermediate jacks used, shall be capable of continuously monitoring the jacking pressure, the rate of advancement and the distance jacked. The equipment shall have the capability of limiting the jacking force applied to the pipe/tunnel shield so as not to exceed the maximum compressive loads allowed for the pipe. A lubrication system shall be provided that injects an approved lubricant at the

© 2012 City of Franklin, Tennessee. All rights reserved.

rear of the tunneling shield to lower the friction developed on the exterior of the pipe during jacking.

5. The spoil can be removed from inside the pipe or casing by auger, compressed air, or water jetting.
6. Tolerances:
   a. Microtunnel accuracy should be within ± 1 inch (both horizontally and vertically).
   b. The borehole shall follow the design centerline of the pipe profile and alignment described on the Drawings. At no point in the bore will the combined radii in the plan and profile exceed the allowable minimum radius of the pipeline manufacturer.

D. Pipe Ramming:
1. Excavate suitable sized pits to accommodate equipment at entrance and exit of proposed tunnel bore. The Contractor shall furnish and install trench shoring or bracing in compliance with OSHA standards.
2. Set guide rails to line and grade of proposed bore. The first section of pipe or casing shall be equipped with a steel band around the leading edge to overexcavate the bore and reduce friction on successive sections.
3. Install steel pipe casing using a pneumatic tool hammer to push the pipe or casing into the ground. The leading edge of the pipe shall be left open for most applications, allowing the soil to enter the pipe or casing. The leading edge can be closed for pipe casing diameters of 4 inches or less.
4. Remove spoil from inside of pipe casing by auger, compressed air, or water jetting.
5. Tolerances:
   a. Pipe ramming bore accuracy should be within ±5% (both horizontally and vertically) of total bore length.
   b. The bore shall follow the design centerline of the pipe profile and alignment described on the Drawings. At no point in the bore will the combined radii in the plan and profile exceed the allowable minimum radius of the pipeline manufacturer.

E. Tunneling:
1. Excavate suitable sized pits/shafts to accommodate the equipment at entrance and exit of proposed tunnel bore. The Contractor shall furnish and install trench shoring or bracing in compliance with OSHA standards.
2. Excavate a utility tunnel using a tunnel boring machine (TBM) and conventional methods. Excavation of tunnel shall take place within tunneling shield. Tunneling shield shall be of steel construction and sufficient length to install one complete ring of liner plates before it is advanced for the installation of the next ring of liner plates.
3. Liner plate must be constructed in-place in the tail section of the tunneling shield. Liner plate shall have tapped grout holes of minimum 2 inch diameter, spaced at approximately 3 feet along the circumference of the tunnel. The grout holes shall be spaced 4 feet longitudinally along the tunnel course.
4. Inject grout through liner plate grout holes. Grout holes shall be plugged when grouting is completed.
5. Install utility carrier pipeline after tunnel is complete and fill remaining annular space completely with filler. Carrier pipe must be able to withstand potential earth loads transferred to the pipe after the annular space is filled with filler.
6. Tolerances:

© 2012 City of Franklin, Tennessee. All rights reserved.

a. Tunnel accuracy shall be within ±1.0 ft horizontally and ±0.1 ft vertically.
b. The borehole shall follow the design centerline of the pipe profile and alignment described on the Drawings. At no point in the bore will the combined radii in the plan and profile exceed the allowable minimum radius of the pipeline manufacturer.

F. Pipe Bursting:

1. Pipe Bursting shall be conducted using Horizontal Directional Drill (HDD)/Impactor, Pneumatic, Hydraulic or Static pipe bursting systems. The pipe bursting unit shall be designed and manufactured to force its way through the existing line by fragmenting the pipe and compressing the broken pieces into the surrounding soil as its progresses. The bursting unit shall generate sufficient force to burst and compact the existing pipeline. See manufacturer specifications for what size unit should be used in what diameter of pipe, as well as parameters of what size unit for percentage of upsize allowed.
2. The HDD or winch should be fitted with a direct reading load gauge to measure the pullback force or winching load. The Contractor shall provide a system of guide pulleys and bracing at the exit pit to minimize cable contact with the existing line between launch and exit pits. The winch cable, burst head, and polyethylene pipe cannot come into contact with the supports of the trench shoring in the insertion pit.
3. All buried utilities adjacent to the pipe bursting operation shall be reviewed and where necessary be excavated to relieve transient loading during the insertion operation. If any utilities are within 24" of the pipe to be burst, the Contractor shall excavate a pit at the location to check clearance. The amount of clearance will be affected by the soil type, the amount of up-sizing and the location of the existing utility in relation to the line being burst. If adequate separation does not exist between the existing line and the subject utility, the Contractor shall employ substitute means to rehabilitate the existing line.
4. Any concrete encasements shall be excavated and broken out prior to the bursting operation to allow the steady and free passage of the pipe bursting head. All in-line valves and fittings shall be removed prior to the bursting operation.
5. The new polyethylene pipe shall be inserted immediately behind the bursting head in accordance with the manufacturer's recommended procedures. The bursting equipment shall be specifically designed and manufactured for the type of insertion process being used. The insertion pit shall be long enough to avoid imposing a bending radius of less than 35 times the outside diameter of the pipe liner during installation.
6. The polyethylene pipe shall be assembled and joined at the site using the butt-fusion method to provide a leak proof joint. Threaded or solvent-cement joints and connections are not permitted. All equipment and procedures used shall be in strict compliance with the manufacturer's recommendations. Fusing shall be accomplished by personnel certified as fusion technicians by a manufacturer of polyethylene pipe and/or fusing equipment. In cases where the insertion pit is not a manhole, the liner pipe may be joined by use of a stainless steel full encirclement clamp or the installation of a new manhole. Details of the recommended lengths of such clamps to afford adequate pullout protection are summarized as follows:

Inner Diameter of Liner Pipe (inches)	Minimum Width of Clamp (inches)
8.0	15
12.0	20
15.0	30
18.0	30

© 2012 City of Franklin, Tennessee. All rights reserved.

7. Any annular space between the existing pipe and the liner shall be filled with cement grout in accordance with Paragraph 2.6. Precautions shall be taken to prevent collapse of the liner with grouting pressure. Either place the grout under very low pressure, or hydrostatically pressurize the liner pipe during the grouting process to resist collapse.
8. At all points where the polyethylene pipe is exposed (such as at insertion shafts, at service connection fittings, or other points where the existing pipe must be removed), the polyethylene pipe shall be encased in a cement-stabilized sand or high density material to prevent deflection due to earth loading or subsidence. Material should be in accordance with the cement grout described in Paragraph 2.6.
9. After installation of the polyethylene liner pipe, a minimum of 6-inches of the liner pipe shall be left to protrude from the wall of the entrance and exit pits prior to relaxation. A minimum 48 hour relaxation period (longer if recommended by the manufacturer) shall be required to allow the pipe to stabilize. After the relaxation period, the protruding ends of the pipe shall be neatly trimmed back to fit the structure or match up to other equipment and materials. Allow a slight flaring of the material so that the liner will not pull away from the opening and retract into the original pipe.
10. Pressure test the polyethylene pipe in accordance with the contract document Section applicable for the pipeline intent.
11. Service connections to the polyethylene pipe shall be accomplished by the sidewall fusion method in accordance with the manufacturer's instructions. Refer to Division 33 Section "Sanitary Sewer (Gravity)" for service connection materials. \
12. Dimension Ratios: The minimum wall thickness of the polyethylene pipe shall meet the following:

Depth of Cover (feet)	**Minimum SDR**
0-16	21
>16	17

3.3 MANAGEMENT OF CUTTINGS AND FLUIDS

A. The approved methods of trenchless installation are to be conducted in a manner to eliminate the discharge of water, drilling mud, and cuttings to the creeks or land areas involved during the construction process. Contractor shall immediately contain and clean-up any inadvertent returns. Contractor shall also provide equipment and procedures to maximize the recirculation or reuse of drilling mud to minimize waste disposal.

B. Disposal of drilling and cutting fluids shall be responsibility of the Contractor and shall be conducted in compliance with all relative environmental regulations, easement and work space agreements, and permit requirements.

C. Water supply is the Contractor's responsibility, whether purchased locally, hauled in, or pumped from the creek. If pumped from the creek, The Contractor must comply with the established rules set by the Tennessee Department of Environment and Conservation (TDEC).

© 2012 City of Franklin, Tennessee. All rights reserved.

D. Drilling and cutting fluids must be free of all additives that will adversely affect the environment.

E. Adequate dewatering of all excavations and tunnels is the Contractor's responsibility unless otherwise stated.
   1. Take measures to prevent surface water from entering excavation.
   2. Pump surface water and groundwater from excavation or tunnel, if necessary.
   3. Discharge water may not be discharged to adjacent property without written permission from property owner.
   4. Excavation discharge water should not interfere with vehicular traffic and must be directed away from adjacent electrical facilities.
   5. Sanitary sewers are not an acceptable option for disposal of discharge water.
   6. Erosion control measures should be taken to protect the discharge location(s), if applicable.
   7. Adjacent structures should be monitored for subsidence as a result of dewatering, if applicable.

3.4 CLEANUP, REPAIRS, AND RESTORATION

A. The Contractor is responsible for leaving all areas affected by his construction activities in a condition equal to or better than the condition before construction.

B. All carrier pipe beyond the end of casing pipe as well as in entry and exit pits shall be bedded and backfilled in accordance with Division 31 Section "Earthwork".

C. The Contractor shall restore area around entry and exit pits within 1 day of work completion. Fill to previous existing ground elevation and grade any areas where settlement occurs due to subsidence.

D. Install a utility identification sign above ground at each end of the casing or tunnel. If the utility has been installed without a casing or tunnel, install utility identification signs as shown on the Drawings.

END OF SECTION

© 2012 City of Franklin, Tennessee. All rights reserved.

PART 1 - GENERAL

1.1 RELATED DOCUMENTS

A. Drawings and general provisions of the Contract, including General and Supplementary Conditions and other Division 01 Specification Sections, apply to this Section.

1.2 SUMMARY

A. This Section includes requirements for 3 inch diameter and greater water distribution piping.

B. Related Sections include the following:
1. Division 31 Earthwork Sections for excavation requirements.
2. Division 32 Section "Pavement Repair" for open trench installation repair work.
3. Division 33 Section "Trenchless Installation of Utilities" for casing pipe requirements.
4. Division 33 Section "Water Service Assemblies" for service connection requirements.

1.3 DEFINITIONS / STANDARDS

A. The following are industry abbreviations:
1. AASHTO: American Association of State Highway and Transportation Officials
2. AISI: American Iron and Steel Institute
3. ANSI: American National Standards Institute
4. ASME: American Society of Mechanical Engineers
5. ASTM: American Society for Testing and Materials
6. AWWA: American Water Works Association
7. DIP: Ductile iron pipe.
8. MSS: Manufacturers Standard Society

B. Buried piping shall be of the bell and spigot type.

C. Non-buried piping shall have flanged ends, unless otherwise noted on the Drawings.

D. Use Mechanical Joint Fitting Restraining Device for plain end piping connections to fittings, hydrants, valves, etc.

1.4 GENERAL REQUIREMENTS

A. The minimum size water main shall be 8" unless otherwise approved or required by WMD. The minimum size water line in commercial areas shall be 10" unless otherwise approved or required by WMD.

B. Water main sizes shall be justified by hydraulic analysis based on flow demands and pressure requirements. Minimum pressure in system under all conditions of flow is 20 psi. Pressures no greater than 100 psi shall be delivered to the customer.

C. Water mains shall be ductile iron pipe unless otherwise approved by the Water Management Department (WMD).

© 2012 City of Franklin, Tennessee. All rights reserved.

D. Generally the following locations should be utilized for location of new water lines unless field conditions such as other utilities, etc., make it impractical to do so:

New Subdivisions - New water mains shall be in the right-of-way near the edge of pavement parallel to the property line, unless otherwise approved by the City of Franklin and shall not be located under sidewalks.

Along older roads in existing subdivisions which have open ditches, the water main shall be located in easements unless otherwise approved by the City of Franklin.

Where underground electrical service exists or is proposed, the water line must be located on the opposite side of the road.

E. Water mains and wastewater mains or storm sewers shall not be laid in the same trench.

F. Water mains shall be laid at least 10 feet horizontally from any wastewater main, storm sewer or sewer manhole, whenever possible; the distance shall be measured edge-to-edge.

G. Water mains crossing over wastewater mains or storm sewers shall be laid to provide a separation of at least 18 inches between the bottom of the water main and top of the wastewater main or storm sewer, whenever possible.

H. When conditions prevent a horizontal separation of 10 feet, a water main may be laid closer to a wastewater main or a storm sewer as long as the bottom of the water main is at least 18 inches above the top of the wastewater main or storm sewer.

I. If the 18 inch vertical separation cannot be provided as described above, the water main and wastewater main shall both be constructed of ductile iron pipe. Water mains also passing under wastewater mains shall have a vertical separation of at least 18 inches between the bottom of the wastewater and the top of the water main; a concrete cap shall be installed on the water line; a full joint of water line pipe shall be used and centered at the point of crossing so that the joints will be equidistant and as far as possible from the wastewater main. Requires prior approval by WMD.

J. Where gas lines exist or are proposed there must be at least 10' horizontal separation between the water line and gas line and a minimum 18" vertical separation between the two lines.

K. No water main shall pass through or come into contact with any part of a wastewater main or manhole

L. Dead ends shall be minimized in order to provide better water service by looping the system.

M. Dual feeds shall be required unless otherwise approved by the City of Franklin.

N. Fire hydrants shall be installed at the end of dead end water mains.

O. The minimum size water line to serve a fire hydrant is 6 inches.

1.5 SUBMITTALS

A. Product Data:

© 2012 City of Franklin, Tennessee. All rights reserved.

1. Ductile iron pipe.
2. Ductile iron fittings.
3. Ductile iron flanged pipe.
4. Pipe insulation and accessories.
5. High Density polyethylene pipe.
6. High Density polyethylene fittings.
7. Mechanical joint restraint devices.
8. Flanged coupling adapters.
9. Flexible expansion joint.
10. Concrete vaults and accessories.
11. Line markers.
12. Utility warning tape.
13. Detection wire.

B. Shop Drawings:
   1. Concrete vaults, including hatches, ladders, and drains.

C. Operation and Maintenance Data: For specialties to include in emergency, operation, and maintenance manuals.

1.6 QUALITY ASSURANCE

A. Product Options: Drawings indicate size, profiles, and dimensional requirements of piping and specialties and are based on the specific system indicated.

B. Comply with the regulatory requirements of local, state and federal agencies having jurisdiction.

C. Piping material shall bear label, stamp, or other markings of specified testing agency.

D. Water lines installed in trenches deeper than 6 feet must be discussed with City staff prior to approval.

E. Comply with NSF 61 for materials for water service piping and specialties for domestic water.

F. The pipe manufacturer must furnish the Owner a notarized certificate stating that the pipe furnished has been manufactured and tested in accordance with the applicable standards.

G. The length of each individual piece of ductile iron pipe shipped must be plainly marked on each piece of pipe. Each piece of pipe shall bear the manufacturer's name or trademark, the year in which it was produced, and the letters "DI" or the word "DUCTILE".

H. All ductile iron pipe shall be the product of one American based manufacturer with a minimum of five (5) years of experience in manufacturing the size, class, and quantity of pipe specified herein. The manufacturer must have a successful performance record on projects of comparable scope and magnitude.

1.7 PRODUCT DELIVERY, STORAGE, AND HANDLING

© 2012 City of Franklin, Tennessee. All rights reserved.

A. Delivery: Deliver piping with factory-applied end caps. Maintain end caps through shipping, storage, and handling to prevent pipe-end damage and to prevent entrance of dirt, debris, and moisture.

B. Storage:
   1. Protect stored piping from moisture and dirt. Elevate above grade. Do not exceed structural capacity of floor when storing inside.
   2. Store plastic piping protected from direct sunlight. Support to prevent sagging and bending.

C. Handling: Protect flanges, fittings, and specialties from moisture and dirt.

D. Any pipes strung out along the route of the proposed lines before the actual installation of water lines is due to take place shall be capped on both ends and shall not be lowered into the trench until they have been swabbed to remove any mud, debris, etc., that may have accumulated within them. Only string out what can be laid in a day. Remove all unnecessary material from the bell and spigot end of each pipe. Before any pipe is laid, brush and wipe clean the outside of its spigot end and the inside of its bell, and leave dry and oil-free.

PART 2 - PRODUCTS

2.1 DUCTILE IRON PIPE

A. Ductile iron pipe shall conform to the requirements of ANSI 21.151/AWWA C151 latest revision for ductile iron pipe centrifugally cast in metal or sand-lined molds. It shall be made and tested in accordance with ASTM A536, latest revision. The pipe shall be able to withstand a hydrostatic pressure of 500 psi.

B. The design thickness shall be that specified by ANSI A21.50/AWWA C150 latest revision except that all pipe with a diameter of 12 inches or less shall be Pressure Class 350 and all pipe with a diameter 14 inches or greater shall be Pressure Class 300 unless determined otherwise by the Owner or Engineer.

C. Coatings and Lining: Pipe shall be lined with thin cement as specified in ANSI A21.4/AWWA C104. In addition, an asphaltic coat approximately 1 mil thick shall be applied to the cement lining in accordance with the pipe manufacturer's standard practices. The outside coating shall be an asphaltic coating approximately 1 mil thick in accordance with ANSI A21.51/AWWA C151.

D. The bell of each pipe shall have a tapered annular opening and a cast or machined retaining groove for the gasket. The gasket shall have a flared design so that maximum deflection will be provided. The plain spigot end of the pipe shall be beveled in order to simplify its entry into and centering within the bell and compression of the gasket.

E. Gaskets:
   1. Gaskets shall be Styrene Butadiene Copolymer (SBR) or Ethylene Propylene Diene Monomer (EPDM) in accordance with ANSI A21.11/AWWA C111, latest revision made in the form of a solid ring to exact dimensions.
      a. Push-on Joint Gaskets: The design of the gasket groove in the bell of the pipe and the design, hardness, and other properties of the gasket itself shall be such

© 2012 City of Franklin, Tennessee. All rights reserved.

that the joint is liquid tight for all pressures from a vacuum to a maximum rating of 350 psi of internal liquid pressures. Gaskets for pipe with an operating pressure greater than 160 psi shall be restrained joint gaskets.

1) Manufacturer / Model:
   a) American Ductile Iron Pipe "Fastite,"
   b) U.S. Pipe "Tyton," or
   c) Approved equal.

b. Push-on Restrained Joint Gaskets: Restrained pipe and fittings are as shown on the Drawings. Retainer glands and similar devices will not be allowed unless otherwise noted or shown on the Drawings or approved by the Owner. Push-on joint restraint shall be incorporated in the design of the pipe bell and gasket. The restraint shall be provided by the wedging action developed between pairs of hardened high-strength, stainless steel elements spaced around the gasket. The push-on restrained joint shall be rated for 250 psi working pressure.

1) Manufacturer / Model:
   a) American Ductile Iron Pipe "Fast-Grip" (for pipe sizes 24-inch and less),
   b) U.S. Pipe "Field Lok" Gaskets (for pipe sizes 24-inch and less),
   c) American Ductile Iron Pipe "Flex-Ring" (for pipe sizes 30 and 36 inch),
   d) American Ductile Iron Pipe "Lok-Ring" (for pipe sizes greater than 46 inches),
   e) U.S. Pipe "TR Flex" (for pipe sizes 24-inch and larger), or
   f) Approved equal.

2. Lubricant: Lubricant shall be furnished with each order to provide for the proper installation of the pipe supplied with said order. This lubricant shall be nontoxic, impart no taste or smell to the water, and have no harmful effect on the rubber gasket. It shall have a consistency that will allow it to be easily applied to the pipe in either hot or cold weather and that will enable it to adhere to either wet or dry pipe.

F. Welded-on Outlets:

1. Welded-on outlets shall be limited to branch outlets having a nominal diameter less than 70 percent of the nominal diameter of the main line pipe or 30-inch whichever is smaller as shown in the following table.

Main Line Nominal Diameter	**Branch Outlet Nominal Diameter**
10 inch	6 inch
12 inch	8 inch
14 inch	8 inch
16 inch	10 inch
18 inch	12 inch
20 inch	14 inch
24 inch	16 inch
30 inch	20 inch
36 inch	24 inch

2. Parent pipe and branch outlet candidate pipe shall be centrifugally cast ductile iron designed in accordance with ANSI A21.50/AWWA C150 and manufactured in accordance with ANSI A21.51/AWWA C151. Minimum classes shall be: for sizes 4-inch through 54-inch, Special thickness Class 53; for sizes 60-inch through 64-inch, Pressure Class 350.

© 2012 City of Franklin, Tennessee. All rights reserved.

3. Welded-on outlets may be provided as a radial tee outlet, tangential outlet, or lateral outlet fabricated at a specific angle to the main line pipe in 1 degree increments between 45 degrees and 90 degrees from the axis of the main line pipe as shown on the Drawings.
4. All welded-on outlets shall be rated for a working pressure of 250 psi and must have a minimum safety factor of 2.0 based on proof of design hydrostatic test results.
5. The joints on welded-on branch shall meet, where applicable, the requirements of ANSI A21.11/AWWA C111 and/or ANSI A21.15/AWWA C115. The joint materials (glands, gaskets, and studs) shall be furnished where applicable.
6. Weldment for welded-on outlets shall be based on the method described in Section VIII of the ASME Unfired Pressure Vessel Code. Reinforcing welds shall be placed using Ni-Rod 55 cored wire or Ni-Rod 55 electrodes manufactured by INCO Alloys (or an electrode with equivalent performance properties). Carbon Steel electrodes are not acceptable.
7. Prior to the application of any coating or lining in the outlet area all weldments for branch outlets to be supplied on this project shall be subjected to an air pressure test of at least 15 psi. Air leakage is not acceptable. Any leakage shall be detected by applying an appropriate soapy water solution to the entire exterior surface of the weldment and adjoining pipe edges or by immersing the entire area in a vessel of water and visually inspecting the weld surface for the presence of air bubbles. Any weldment that shows signs of visible leakage shall be repaired and retested in accordance with the manufacturer's written procedures.
8. Welded-on outlets shall be fabricated by the pipe manufacturer at the same facility where the pipe is produced. The pipe manufacturer shall have a minimum of 5 years of experience in the fabrication and testing of outlets of similar size and configuration.
9. The manufacturer shall have a fully documented welding quality assurance system and maintain resident quality assurance records based on ANSI/AWS D11.2, the Guide for Welding Iron Castings. The manufacturer shall maintain appropriate welding procedure specifications (WPS), procedure qualification (PQR), and welder performance qualification test (WPQR) records as well as appropriate air test logs documenting air leakage tests.

G. Manufacturer:
1. American Cast Iron Pipe Company,
2. Griffin Pipe Products,
3. McWane,
4. U.S. Pipe, or
5. Approved equal.

2.2 DUCTILE IRON FITTINGS

A. Standard and special fittings shall be Pressure Class 350 ductile iron. Use standard mechanical joint fittings or anchoring tees at hydrant locations. All fittings shall conform to the specifications of ANSI A21.10/AWWA C110 (Full Body) or ANSI A21.53/AWWA C153 (Compact), latest revisions.

B. All buried fittings shall be push-on or mechanical joint. Non-buried fittings shall be flanged unless otherwise shown on Drawings or directed by the Owner. Where flanged pipe is shown, no substitution of a Uni-Flange type joint will be used without prior approval of the Owner. Where push-on joint fittings are used, the fittings must be rodded to an anchor (i.e. dead-man,

© 2012 City of Franklin, Tennessee. All rights reserved.

valve, etc.), have a mechanical joint fitting restraining device, or push-on restrained joint gasket. Use anchor tees or joint restraint device at hydrant locations.

C. Coatings and Lining: Fittings shall be lined with cement as specified in ANSI A21.4/AWWA C104. In addition, an asphaltic coat approximately 1 mil thick shall be applied to the cement lining in accordance with the pipe manufacturer's standard practices. The outside coating shall be an asphaltic coating approximately 1 mil thick in accordance with ANSI A21.51/AWWA C151.

D. Manufacturer:
   1. Tyler/Union
   2. American Cast Iron Pipe Company
   3. U.S. Pipe and Foundry

2.3 DUCTILE IRON FLANGED PIPE

A. Flanged pipe shall meet the requirements of ductile iron pipe, as specified herein, unless otherwise specified.

B. All ductile iron flanged pipe shall comply with ANSI A21.15/AWWA C115, latest revision. The pipe barrel shall be manufactured in accordance with ANSI A21.51/AWWA C151, latest revision. All flanges shall be ductile iron and rated for 250 psi working pressure. To insure accountability, all flanged pipe shall be fabricated at the factory by the barrel manufacturer. All flanges (unless otherwise indicated or required) shall be faced and drilled ANSI B16.1 125-pound for ductile iron and ANSI B16.5 150-pound for steel.

C. Provide a flanged pipe gasket for each joint made of Styrene Butadiene Copolymer (SBR) or Ethylene Propylene Diene Monomer (EPDM) which meet all the material requirements of ANSI A21.11/AWWA C111.

D. Gaskets for flanged pipe with an operating pressure greater than 160 psi shall be Toruseal Flange Gasket as manufactured by American Cast Iron Pipe Company, American Ductile Iron Pipe Division, or approved equal.

E. Manufacturer:
   1. U.S. Pipe
   2. American Cast Iron Pipe Company
   3. Approved equal

2.4 PIPE INSULATION AND ACCESSORIES

A. Pipe Insulation:
   1. Pipe insulation shall be polyisocyanurate foam insulation and meet the requirements of ASTM-C591. Insulation shall have a maximum thermal conductivity of 0.19 BTU-in/hr-ft^2-^{o}F at a mean temperature of 75°F and 180 days aging.
   2. Manufacturer / Model:
      a. Pittsburg-Corning,
      b. Trymer 2000, or
      c. Approved equal.

© 2012 City of Franklin, Tennessee. All rights reserved.

B. Aluminum Roll Jacketing:
   1. Jacketing is to be manufactured from aluminum alloy conforming to ASTM B209 designation with 3/16 inch corrugated surface. Minimum thickness shall be 0.010 inch. All jacketing shall have an integrally bonded moisture barrier over the entire surface in contact with the insulation. Overlap jacketing 2 inch minimum at butt joints.
   2. Manufacturer / Model:
      a. Childers, or
      b. Approved equal.

C. Fastening Devices:
   1. All insulation and jacketing shall be secured using a 1/2 inch wide aluminum strapping conforming to ASTM-B209. Strapping shall be 0.020 inch thick and installed on 12 inch centers.
   2. Manufacturer / Model:
      a. Childers, or
      b. Approved equal.

2.5 NOT IN THIS DOCUMENT

2.6 NOT IN THIS DOCUMENT

© 2012 City of Franklin, Tennessee. All rights reserved.

2.7 MECHANICAL JOINT FITTING RESTRAINT DEVICES

A. Ductile Iron Pipe Restraint Devices:
   1. Restraint devices for nominal pipe sizes 3 inch through 48 inch shall consist of multiple gripping wedges incorporated into a follower gland meeting the applicable requirements of ANSI/AWWA C110/A21.10. Restraint device shall have torque limiting twist-off nuts.
   2. Restraint devices shall have a working pressure rating of 350 psi for 4 through16 inch and 250 psi for 18 through 48 inch. Ratings are for water pressure and must include a minimum safety factor of 2 to 1 in all sizes.
   3. Gland body, wedges and wedge actuating components shall be cast from grade 65-45-12 ductile iron material in accordance with ASTM A536.
   4. Manufacturer / Model:
      a. EBAA Iron Inc. Megalug Series 1100, or
      b. Approved equal.

B. Plain End to Plain End Pipe Restraint Device:
   1. Joint restraint to prevent axial separation shall be incorporated into the design of the sleeve or coupling used to connect two plain ends of same or dissimilar materials, such as ductile iron pipe, steel pipe and or high density polyethylene (HDPE) pipe.
   2. To prevent movement causing fitting to slide or rotate, internal pipe wall stiffeners must be used. The stiffeners must be sized to encompass the entire bearing length of the restraint devices.
   3. Restraint devices shall consist of multiple gripping wedges incorporated into a follower gland. Restraint device shall have torque limiting twist-off nuts.
   4. The coupling sleeve shall be coated internally with a minimum of 15mils of fusion bonded epoxy conforming to the applicable requirements of ANSI/AWWA C213.
   5. Ductile Iron components shall meet or exceed the requirements of ASTM A536.
   6. The restrained joining system shall meet the applicable requirements of AWWA C219, ANSI/AWWA C111/A21.11, and ASTM D2000.
   7. Manufacturer / Model:
      a. EBAA Iron, Inc. Series 3800, or
      b. Approved equal.

2.8 FLANGED COUPLING ADAPTERS

A. Flanged coupling adapters shall be used to connect plain end pipe to flanged fittings, meters, valves, or equipment as shown on the Drawings shall be rated for 200 psi working pressure unless indicated otherwise.

© 2012 City of Franklin, Tennessee. All rights reserved.

B. Materials of Construction:

Body	Steel	ASTM A53
Flange		
3" thru 5" Pipe		ANSI 150 lb flat face
6" Pipe and above		AWWA C207 Class D, ANSI 150 lb drilling
Follower		
3" thru 12" Pipe	Ductile Iron	ASTM A536
14" Pipe and above	Heavy Rolled Steel	AISI C1018
Gasket		Grade 30
Bolts and Nuts	304 Stainless Steel	
Interior Coating	Fusion Bonded Epoxy	
Exterior Coating	2 Coats of Rust Inhibiting Synthetic Resin or Asphaltum Enamel	

C. Manufacturer / Model
1. Smith-Blair Model 913 Steel Restrained Flanged Coupling Adapter with Optional Anchor Studs, or
2. Approved equal.

2.9 FLEXIBLE EXPANSION JOINT

A. Flexible expansion joints shall be installed in the locations indicated on the Drawings. Flexible expansion joints shall be cast from grade 65-45-12 ductile iron conforming to the material requirements of ASTM A536 and ANSI/AWWA C153/A21.53.

B. Each flexible expansion joint shall be pressure tested at the factory against its own restraint to a minimum of 350 psi (250 psi for 30" diameter and larger.) A minimum 2:1 safety factor shall apply.

C. Each flexible expansion joint shall consist of an expansion joint designed and cast as an integral part of a ball and socket type flexible joint, having a minimum per ball deflection of: 20 degrees, 3 inch – 12 inch; 15 degrees, 14 inch – 36 inch; 12 degrees, 48 inch and 4-inches minimum expansion. Additional expansion sleeves shall be available and easily added or removed at the factory or in the field. Both standardized mechanical joint and flange end connections shall be available.

D. All internal surfaces (wetted parts) shall be lined with a minimum of 15 mils of fusion bonded epoxy conforming to the applicable requirements of ANSI/AWWA C213. Sealing gaskets shall be constructed of EPDM. The coating and gaskets shall meet ANSI/NSF-61.

E. All external surfaces shall be coated with a catalyzed coal tar epoxy conforming to the material requirements of AWWA C210. Appropriately sized polyethylene sleeves, meeting ANSI/AWWA C105/A21.5, shall be included for direct buried applications.

© 2012 City of Franklin, Tennessee. All rights reserved.

F. Manufacturer / Model:
   1. EBAA Iron, Inc. FLEX-TEND, or
   2. Approved equal.

2.10 CONCRETE VAULTS AND ACCESSORIES

A. Concrete vaults shall be rectangular or circular, either precast or cast-in-place reinforced concrete, of the dimensions and specifications noted on the Drawings. Concrete shall have a 28-day compressive strength of 4000 psi. Circular precast concrete barrel sections for valve vaults shall conform to ASTM C478 except sections deeper than 12 feet shall have reinforcing equal to that ASTM C76 Class III reinforced concrete pipe unless otherwise noted on the Drawings.

B. Precast section joints shall be mortared or grouted; joined with AASHTO M-198-75 preformed flexible butyl type joint sealant. Joints should be water tight
   1. Manufacturer / Model:
      a. Hamilton-Kent "Kent-Seal No. 2",
      b. K.T. Snyder Company "rub 'r-Nek",
      c. Press Seal Gasket "E-Z Stik", or
      d. Approved equal.

C. Concrete Vault Hatch
   1. Channel frame shall be 1/4 inch (7 mm) thick extruded aluminum with a mill finish, incorporating a continuous concrete anchor. A 1-1/2 inch (38 mm) drainage coupling shall be located in the front left corner of the channel frame. A bituminous coating shall be applied to the frame exterior where it will come into contact with concrete. The entire frame must be supported by a full bed of Class A concrete (H-20 load rating).
   2. The door panel(s) shall be 1/4 inch (7 mm) aluminum diamond plate, reinforced to withstand a live load of 300 psf or H-20 uniform live load with a maximum allowable deflection of 1/150 of the span and shall not protrude into the channel frame when in the open position. In grassed or landscaped (non-traffic) areas the access door shall be designed for 300 psf loading. In areas that may receive light vehicle traffic, such as sidewalks or edges of parking lots, the access door shall be designed for H-20 wheel loading.
   3. Doors shall open to 90 degrees and automatically lock with a T-316 stainless steel hold open arm with an aluminum release handle. For ease of operation, the door hold open arm shall incorporate an enclosed stainless steel compression spring assist.
   4. Doors shall close flush with the frame and rest on a built-in neoprene cushion/gasket (300 psf load rating).
   5. Hinges and all fastening hardware shall be T-316 stainless steel.
   6. Unit shall lock with a T-316 stainless steel slam lock with removable key and have a non-corrosive handle.
   7. Unit shall carry a lifetime guarantee against defects in material and/or workmanship.
   8. Manufacturer / Model:
      a. Halliday Products, Inc., Orlando, Florida, Series W2C (double leaf), or
      b. Approved equal.

© 2012 City of Franklin, Tennessee. All rights reserved.

D. Ladder/Steps:
   1. Ladder/steps shall be steel encased in copolymer polypropylene plastic (or equal), "Press Fit" type, have an overall width of 12 inches, and spaced at 12 inches.
   2. Manufacturer:
      a. M.A. Industries, or
      b. Approved equal.

E. A vent shall be provided in the top of the vault. The vent shall be constructed of PVC, a minimum of 3 feet tall, and a minimum of 4-inches in diameter with a 24 mesh stainless steel screen. The vent shall be located such that it does not interfere with the opening/closing of the hatch or impede access to the vault interior. The vault penetration shall be a thrust collar wall pipe cast integrally into the vault top. The vent shall be flanged and bolt to the wall sleeve.

F. Pipe Penetrations shall be water tight and sealed in the vault wall opening with flexible and/or rigid connections. At least one pipe penetration shall be a rigid connection.
   1. Flexible connections shall be provided using resilient connectors meeting the requirements of ASTM C-923. Resilient connectors shall be compression type cast integrally into the vault wall.
      a. Manufacturer:
         1) A-Lok Products, Inc., Tullytown, PA, or
         2) Approved equal.
   2. Rigid Connections shall be provided using a thrust collar wall pipe. Thrust collar wall pipes shall be cast integrally into the vault wall. Thrust collar wall pipes shall meet the requirements of ductile iron flanged piping, as specified herein, unless otherwise specified.
      a. Manufacturer:
         1) U.S. Pipe,
         2) American Ductile Iron Pipe, or
         3) Approved equal.

G. Vault Drainage:
   1. Vault drainage shall be as noted on the Drawings and according to the following.
      a. Drain pipe shall be schedule 80 PVC and penetrate the wall at floor level. Slope of drain line shall be in accordance with local plumbing codes. A varmint screen shall be installed on the drain line inside the vault for ease of maintenance. A flap valve shall be installed on the drain line discharge.
      b. The vault floor shall have a sump with a minimum depth of 12-inches and a minimum inside diameter of 14-inches. The sump is not required to be cast integrally in the floor of precast vaults. However, the seal between the vault and the sump shall be watertight and no part of the sump will be allowed to extend above the floor thereby inhibiting drainage. The sump shall be concrete or HDPE.
         1) The sump pump shall be automatic with level operation. It shall operate on 115 volt, single phase, 60 hz power. The pump shall be 1/3 horsepower and pump a maximum flow of 30 gpm at 10-feet of head with a 1-1/2 inch discharge.
         2) Manufacturer / Model:
            a) Water Ace Model R3V, or

© 2012 City of Franklin, Tennessee. All rights reserved.

b) Approved equal.

H. Vault electrical, if any, shall be in accordance with the requirements of the Specifications and Drawings.

I. Vault Piping:
1. Piping shall be supported with column type pipe saddle supports, concrete block, or other Owner-approved method.
   a. Column type pipe saddle supports shall be stanchion type with vertical adjustability and U-bolt attachment to pipe. The stanchion shall be properly sized to carry the pipe load. The saddle assembly and base shall be cast iron or carbon steel.
      1) Manufacturer:
         a) Grinnell Corporation, Providence, RI, or
         b) Approved equal.
   b. Concrete pipe supports shall be full or half-size, solid CMU placed under pipe, valves, meters, etc. flanges or under flanged base bends. Flanged base bends shall be bolted to the concrete pipe support.
2. Piping shall be insulated in accordance with Paragraph 2.8 subparagraphs a and c and/or have heat tape.

J. Valves shall be in accordance with Division 33 Section "Valves"

K. Meters shall be in accordance with Division 33 Section “Water Service Assemblies.”

L. Manufacturer:
1. Cloud Concrete Products of Nashville, Inc, or
2. Approved equal.

2.11 LINE MARKERS

A. Markers shall be single piece design, constructed of durable, UV resistant, composite material, and have a pointed end for ease of installation. The marker shall have a constant flat “T” cross-sectional design and be 3.75 inch in width and of such length to provide a minimum height above the ground surface of 44 inches and a minimum embedment depth of 18 inches. The marker shall resist displacement from wind and vehicle impact forces. The marker shall be free of burns, discoloration, cracks, bulges, or other objectionable marks. A line shall be stamped horizontally across the front of the marker to indicate proper burial depth.

B. The marker shall be pigmented throughout the entire cross-section so as to produce a uniform color which is an integral part of the material. The marker shall be colored blue.

C. Line markers shall be labeled with the lettering “CAUTION WATER LINE” with the Owner’s name and telephone number written below the lettering.

D. Manufacturer / Model:
1. Carsonite International, Early Branch, SC Model CUM 375 or
2. Approved equal.

© 2012 City of Franklin, Tennessee. All rights reserved.

2.12 UTILITY WARNING TAPE

A. Detectable underground utility warning tape, which can be located from the surface by a pipe detector, shall have of a minimum thickness of 0.35 mils solid aluminum foil encased in a protective inert plastic jacket that is impervious to all known alkalis, acid, chemical reagents and solvents found in the soil. The tape shall have a minimum overall thickness of 5.0 mils and a minimum width of 6 inch (metallic piping) with a minimum unit weight of 2-1/2 pounds/ 1 inch x 1,000 foot. The tape shall be color coded blue in accordance with APWA National Color Code and permanently imprinted "Caution Buried Water Line Below".

B. Non-detectable underground utility warning tape shall be installed directly above all utility lines. The tape shall be polyethylene and have a minimum thickness of 4 mils and a minimum width of 3 inches. The tape shall be color coded blue in accordance with APWA National Color Code and permanently imprinted "Caution Buried Water Line Below".

C. Manufacturer / Model:
   1. Allen Systems, "Detect Tape",
   2. Empire Level Mfg. Corp., "Magnatee", or
   3. Approved equal.

2.13 DETECTION WIRE

A. Detection wire shall be UL approved, 14 AWG, type THHN solid copper. The wire shall be color coded blue in accordance with APWA National Color Code.

PART 3 - EXECUTION

3.1 EARTHWORK

A. Refer to Division 31 Section "Earthwork" for excavating, trenching, and backfilling.

3.2 PIPING APPLICATIONS

A. Use pipe, fittings, and joining methods for piping systems according to the following applications.
   1. Transition couplings and special fittings with pressure ratings at least equal to piping pressure rating maybe used in applications below, unless otherwise indicated.
   2. Do not use flanges, unions, or keyed couplings for underground piping.
   3. Flanges, unions, keyed couplings, and special fittings shall be used, instead of joints indicated, on aboveground piping and piping in vaults.

3.3 JOINT CONSTRUCTION

A. Clean and assemble pipe joints and fittings according to the following:
   1. Ductile-Iron Piping, Gasketed Joints for Water-Service Piping: AWWA C600 and AWWA M41.
   2. Ductile-Iron Piping, Grooved Joints: Cut-groove pipe. Assemble joints with keyed couplings, gaskets, lubricant, and bolts according to coupling manufacturer's written instructions.

© 2012 City of Franklin, Tennessee. All rights reserved.

3. Dissimilar Materials Piping Joints: Use adapters compatible with both piping materials, with OD, and with system working pressure.

3.4 PIPING INSTALLATION

A. No connection to an existing water line shall be made until all lines have been pressure tested, microbiological sampling completed and approved for service by the Resident Project Representative.

B. Water Main Connections: Tap water main according to requirements of water utility company and of size and in location indicated.
   1. Make connections larger than 2 inch nominal diameter with tapping machine according to the following:
      a. Install tapping sleeve and tapping valve according to MSS SP-60.
      b. Install tapping sleeve on pipe to be tapped. Position flanged outlet for gate valve.
      c. Install gate valve onto tapping sleeve. Comply with MSS SP-60. Install valve with stem pointing up and with valve box.
      d. Use tapping machine compatible with valve and tapping sleeve; cut hole in main. Remove tapping machine and connect water-service piping.

C. Install ductile iron pipe and fittings according to AWWA C600 and AWWA M41.

D Bury piping with a depth of cover of at least 36 inches, with top of pipe at least 12 inches below level of maximum frost penetration, and according to the following:
   1. Under Driveways: With at least 36 inches cover over top of pipe.
   2. Under Roadways: With at least 42 inches cover over top of pipe.
   3. Under Railroad Tracks: With at least 48 inches cover over top of pipe.
   4. Gas Pipelines: With at least 18 inches of vertical separation and 10 feet of horizontal separation.
   5. Petroleum Pipelines: Comply with pipeline company requirements.
   6. Sewer Lines: With at least 18 inches vertical separation and 10 feet horizontal.

E. Install piping by trenchless methods, where indicated on the Drawings, in accordance with Division 33 Section "Trenchless Installation of Utilities".

F. Install underground piping with restrained joints at horizontal and vertical changes in direction. Use restrained joint piping, thrust blocks, anchors, mechanical joint restraint, tie-rods and clamps, and other supports.

G. Contractor shall adhere to the requirements of Division 31 Section “Earthwork” for installation and backfilling.

H. For all non-metallic piping installations, install continuous underground detection wire. Affix wire to top of pipe prior to backfilling. Wire shall be stripped and tied to valves for continuity.

I. For all underground piping installations, install continuous underground detectable warning tape during backfilling of trench.
   1. Installation of detectable tape shall be per manufacturer’s recommendations and shall be as close to the grade as is practical for optimum protection and detectability. Allow a minimum of 18 inches between the tape and the utility line. Allow a minimum of 6 inches between the tape and the ground surface.

© 2012 City of Franklin, Tennessee. All rights reserved.

J. Install line markers directly above pipeline alignment at intervals of 1,000 feet where indicated on the Drawings. Line markers shall be installed after final clean-up is completed.

3.5 CONCRETE VAULT INSTALLATION

A. Dewater sufficiently to maintain the ground water level at or below the bottom of the vault foundation prior to and during placement of the foundation.

B. Obtain an adequate foundation for the structure by removing and replacing unsuitable material with well graded granular material, by tightening with coarse rock, or by such other means as provided for foundation preparation of the connected lines or as directed by the Owner. Wherever water is encountered at the site, place all cast-in-place bases or monolithic structures on a one-piece waterproof membrane to prevent any movement of water into the fresh concrete.

C. When the foundation subgrade has been prepared and is approved by the Owner, carefully construct the foundation for precast and monolithic structures to the line and grade required by the Drawings. The foundation shall be well graded granular material. In no case shall the vault be supported directly on rock.

D. Vault foundation shall be constructed such that the vault is fully and uniformly supported in true alignment according to the Drawings and as site conditions allow. Make sure that all entering pipe can be installed at proper grade.

E. Thoroughly wet and the completely fill all lift holes and all interior joints between precast elements with non-shrink grout. Smooth them inside to ensure water tightness.

F. Carefully set the vault top at the required elevation, and properly bond it to the vault with cement grout or rubber sealant. Wherever vaults are constructed in paved areas, tilt the vault top so as to conform to the exact slope and grade of the existing adjacent pavement.

G. Place backfill by hand around the vault and to a distance of at least one pipe length into each trench, and tamp with selected material up to an elevation of 12 inches above the crown of all entering pipes. Continue backfilling in accordance with the requirements for trench backfilling.

H. Install pipe supports in accordance with the manufacturer's recommendations. Supports shall be installed in the locations shown on the Drawings. In cases where supports are not shown, supports shall be furnished and installed at appropriate locations to ensure adequate support of piping, valves, etc. Supports shall be installed in locations that ease removal and re-alignment of valves, meters, etc.

I. After the vault had been adjusted to the proper grade, it shall be visually inspected by the Contractor in the presence of the Resident Project Representative. Any defects noted shall be corrected by the Contractor until the work is found satisfactory to the Resident Project Representative. In addition, at the Owner's request, the Contractor may be required within one year to visually inspect any vault(s) that were adjusted. Any work that has become defective shall be redone by the Contractor at no additional expense to the Owner.

© 2012 City of Franklin, Tennessee. All rights reserved.

J. Vault shall have positive drainage when site conditions allow. When positive drainage is not available, a Flygt sump pump shall be installed.

3.6 FIELD QUALITY CONTROL

A. Cleanup: Contractor is required to grade and clean all areas affected by the installation and backfilling of the pipe trench. The Contractor shall do this work within the following constraints:
   1. At a minimum:
      a. No earlier than 2 weeks of pipe trench backfilling; and,
      b. No later than 10,000 feet of additional pipe installation.
   2. At a maximum:
      a. No later than 3 weeks of pipe trench backfilling.

B. Piping Tests: Conduct piping tests after thrust blocks have hardened sufficiently. Fill pipeline 24 hours before testing and apply test pressure to stabilize system. Use only potable water. Conduct tests in accordance with AWWA C600 for ductile iron and AWWA C605 for PVC.

Piping Test Methods Table

Procedure	Pressure	Duration of Test
Simultaneous Pressure and Leakage Tests	150% of working pressure* at point of test, but not less than 125% of normal working pressure at highest elevation. †	2 h
Separate Pressure Test	All pressure test shall be at 200 psi.	2 h
Separate Leakage Test	150% of working pressure* of segment tested. †	2 h

* Working pressure is defined as maximum anticipated sustained operating pressure.
† In no case shall the test pressure be allowed to exceed the design pressure for pipe, appurtenances, or thrust restraints.

1. Pressure Tests:
   a. Slowly fill each valved section of pipe with water, and apply the specified test pressure (based on the elevation of the lowest point of the line or section under test and corrected to the elevation of the test gauge) with a pump and piping arrangement satisfactory to the Owner. Furnish the pump, pipe, connections, gauges, and all necessary apparatus.
   b. Generally, the newly laid line is to be filled using a 1 inch line between an existing water line and the new line. A 1 inch corporation cock is to be installed on each line and a 1 inch meter and 1 inch check valve installed in this line. Insert reduced pressure zone backflow preventer during testing. Remove reduced pressure zone backflow preventer and insert plugs in these taps after all tests are completed.
   c. Before applying the specified test pressure, expel all air from the pipe. If hydrants or blow offs are not available at high points, make the necessary taps at the point of highest elevation before testing, and insert plugs after the test has been completed.
2. Carefully examine all exposed pipe, fittings, valves, and hydrants during the test. Remove any cracked or defective pipes, fittings, valves, or hydrants discovered in consequence of this pressure test, and replace with sound material in the manner specified. Repeat the test until the results are satisfactory to the Owner. Leakage Tests:

© 2012 City of Franklin, Tennessee. All rights reserved.

a. Leakage is defined as the amount of water which must be supplied to the newly laid pipe or any valved section in order to maintain the specified leakage test pressure within 5 psi after pipe has been filed with water and the air expelled.

b. For ductile iron pipe, allowable leakage is defined as:

$$L = \frac{SD\sqrt{P}}{148{,}000}$$

Where:
- L = allowable leakage, in gallons per hour
- S = length of pipe tested, in feet
- D = nominal diameter of the pipe, in inches
- P = average test pressure during the leakage test, in pounds per square inch (gauge)

When testing against closed metal-seated valves, an additional leakage per closed valve of 0.0078 GPH/in. of nominal valve size shall be allowed.

ALLOWABLE LEAKAGE PER 1000 FEET OF PIPELINE* - GPH[H]

Avg. Test Pressure	Nominal Pipe Diameter – *in.*												
psi	**3**	**4**	**6**	**8**	**10**	**12**	**14**	**16**	**18**	**20**	**24**	**30**	**36**
450	0.43	0.57	0.86	1.15	1.43	1.72	2.01	2.29	2.58	2.87	3.44	4.30	5.16
400	0.41	0.54	0.81	1.08	1.35	1.62	1.89	2.16	2.43	2.70	3.24	4.05	4.86
350	0.38	0.51	0.76	1.01	1.26	1.52	1.77	2.02	2.28	2.53	3.03	3.79	4.55
300	0.35	0.47	0.70	0.94	1.17	1.40	1.64	1.87	2.11	2.34	2.81	3.51	4.21
275	0.34	0.45	0.67	0.90	1.12	1.34	1.57	1.79	2.02	2.24	2.69	3.36	4.03
250	0.32	0.43	0.64	0.85	1.07	1.28	1.50	1.71	1.92	2.14	2.56	3.21	3.85
225	0.30	0.41	0.61	0.81	1.01	1.22	1.42	1.62	1.82	2.03	2.43	3.04	3.65
200	0.29	0.38	0.57	0.76	0.96	1.15	1.34	1.53	1.72	1.91	2.29	2.87	3.44
175	0.27	0.36	0.54	0.72	0.89	1.07	1.25	1.43	1.61	1.79	2.15	2.68	3.22
150	0.25	0.33	0.50	0.66	0.83	0.99	1.16	1.32	1.49	1.66	1.99	2.48	2.98
125	0.23	0.30	0.45	0.60	0.76	0.91	1.06	1.21	1.36	1.51	1.81	2.27	2.72
100	0.20	0.27	0.41	0.54	0.68	0.81	0.95	1.08	1.22	1.35	1.62	2.03	2.43

* If the pipeline under test contains sections of various diameters, the allowable leakage will be the sum of the computed leakage for each size.
H Calculated on the basis of Eq. 1.

c. When hydrants are in the test section, the test shall be made against opened hydrant valves.

d. Should any test of pipe laid disclose leakage greater than that specified, the Contractor shall, at his own expense, locate and repair the defective joints until the leakage is within the specified allowance.

3. Prepare reports of all pressure and leakage test activities.

3.7 FLUSHING AND DISINFECTION

A. Preliminary Flushing: Before chlorination, fill lines to remove all air pockets and flush to remove particulates. Flushing velocity shall not be less than 2.5 feet per second.

B. Disinfection Tests: Conduct disinfection tests in accordance with AWWA C651.

1. During construction, take precautions to protect pipe interiors, fittings, and valves against contamination. When pipe laying is not in progress (e.g., at end of the day's

© 2012 City of Franklin, Tennessee. All rights reserved.

work), place watertight plugs in the ends of all pipe already in the trench; if water accumulates in the trench, leave the plugs in place until the trench is dry. Complete the joints of all pipes in the trench before stopping work for any reason.

2. If dirt or other foreign material that has gotten into a pipe will not, in the opinion of the Owner, be removed by flushing, clean the interior of the pipe, and swab with a disinfecting solution of 5 percent hypochlorite.
3. Make water flow from the existing distribution system or some other source approved by the Owner into the newly laid piping, and add chlorine to it. Feed water into the pipe, and chlorine into the water, at constant, measured rates so proportioned that that chlorine concentration in the water in the pipe is kept at a minimum of 25 mg/l available chlorine. To ensure that this concentration is maintained, measure the chlorine residual at regular intervals. Tablet method may also be used.
4. Table I shows how much chlorine is needed for each 100 feet of line for pipes of various diameters. A 1 percent chlorine solution may be prepared either with 1 pound of calcium hypochlorite for each 8.5 gallons of water or sodium hypochlorite.

TABLE I

CHLORINE REQUIRED TO PRODUCE A 25 MG/ℓ CONCENTRATION IN 100 FEET OF PIPE, BY DIAMETER

Pipe Size Inches	100% Chlorine Pounds	1% Chlorine Solutions (Gallons)
4	0.014	0.163
6	0.031	0.367
8	0.054	0.653
10	0.085	1.02
12	0.123	1.47
14	0.167	2.00
16	0.218	2.61
18	0.276	3.31
20	0.340	4.08
24	0.490	5.88

5. While chlorine is being applied, use an approved backflow device so that the treatment dosage will not flow back into the line that is supplying the water. Continue application of chlorine until the entire line being treated is filled with the chlorine solution. Then retain the chlorinated water in the line for at least 24 hours, during which time all valves and hydrants in the line being treated shall be operated so that appurtenances can also be disinfected. After 24 hours, the treated water shall have a chlorine concentration of at least 10 mg/l throughout the line. Once the line has completed the Bac-T test, line should be dechlorinated prior to being placed in to service.

C. Final Flushing: Conduct final flushing in accordance with AWWA C651.

1. After applicable retention period, flush heavily chlorinated water from the line until chlorine concentration in water leaving the main is no higher than that generally prevailing in the system, or less than 1 mg/l. Perform such flushing only at sites where Owner has approved. If no approved point of discharge is available, neutralizing chemicals must be applied to the water in order to neutralize the chlorine residual. The amount of chemicals required to neutralize various residual chlorine concentrations in 100,000 gallons of water are shown in Table II.

© 2012 City of Franklin, Tennessee. All rights reserved.

TABLE II
REQUIRED CHEMICALS TO NEUTRALIZE CHLORINE CONCENTRATIONS

Residual Chlorine Concentration	Chemical Required: Sulfur Dioxide (SO_2)		Sodium Bisulfite ($NaHSO_3$)		Sodium Sulfite (Na_2SO_3)		Sodium Thiosulfate (Na_2S2O_3-$5H_2O$)	
mg/ℓ	*lb*	*(kg)*	*Lb*	*(kg)*	*lb*	*(kg)*	*lb*	*(kg)*
1	0.8	(.36)	1.2	(.54)	1.4	(.64)	1.2	(.54)
2	1.7	(.77)	2.5	(1.13)	2.9	(1.32)	2.4	(1.09)
10	8.3	(3.76)	12.5	(5.67)	14.6	(6.62)	12.0	(5.44)
25	20.9	(9.46)	31.3	(14.20)	36.5	(16.56)	30.0	(13.61)
50	41.7	(18.91)	62.6	(28.39)	73.0	(33.11)	60.0	(27.22)

2. The velocity of water used to flush a line shall be at least 2.5 fps. The flow rates required to produce this velocity in various sizes of pipe are shown in Table III.

TABLE III
REQUIRED OPENINGS TO FLUSH PIPELINES
(40 PSI RESIDUAL PRESSURE)

Pipe Size (Inches)	Flow Required to Produce 2.5 fps Velocity (gpm)	Orifice Size (Inches)	Hydrant Outlet Nozzles: Number	Hydrant Outlet Nozzles: Size (Inches)
4	100	15/16	1	2-1/2
6	220	1-3/8	1	2-1/2
8	390	1-7/8	1	2-1/2
10	610	2-5/16	1	2-1/2
12	880	2-13/16	1	2-1/2
14	1,200	3-1/4	2	2-1/2
16	1,565	3-5/8	2	2-1/2
18	1,980	4-3/16	2	2-1/2
20	2,440	---	2	2-1/2
24	3,470	---	2	2-1/2

3. Once a line has been flushed, test to make certain that the residual chlorine in the water is within acceptable limits.
4. It must be noted that flushing is no substitute for taking preventative measures before and during the laying of water lines. Certain contaminants-especially those in caked deposits-are difficult or even impossible to remove by flushing, no matter how high the velocity. Furthermore, in pipes with diameters of 16 inches or more, it can be difficult to achieve even the minimum recommended flushing velocity of 2.5 fps.

D. Bacteriological Tests: Conduct bacteriological tests in accordance with AWWA C651.
1. After a water line has undergone final flushing but before it is placed into service, collect a sample for bacteriological testing from the beginning and end and all spur lines. If greater than 2500 feet in length, or branches off the main line, more samples will be required.
2. Collect these samples in sterile bottle treated with sodium thiosulfate. Do not use a hose or fire hydrant to collect samples. One suggested sampling method is to install a standard corporation cock in the line with a copper tube gooseneck assembly; after the

© 2012 City of Franklin, Tennessee. All rights reserved.

samples have been taken, the gooseneck assembly can be removed and retained for later use.

3. Take the samples collected to an approved laboratory to be tested for bacteriological quality in order to determine if they contain any coliform organisms. If the initial disinfection fails to produce satisfactory samples, repeat disinfection until satisfactory samples are obtained.
4. When the samples tested are found to be satisfactory, the water line may be placed in service.
5. Never place a water main in service without the Resident Project Representative on site.

E. Disinfection Procedure After Cutting Into or Repairing Existing Lines:

1. The procedures outlined above apply primarily to cases in which the lines are wholly or partially dewatered.
2. However, leaks or breaks that are repaired with clamping devices while the lines remain full of water under the pressure present little danger of contamination and require no bacteriological sampling.
3. When an existing line is opened, whether by accident or design, the excavated area could be wet and contaminated because of the presence of sewers nearby. The danger of contamination from such pollution can be lessened if liberal quantities of hypochlorite are applied to the open trenches. It is better to use tablets for disinfection in such cases because they dissolve slowly and continue to release hypochlorite as water is pumped from the excavation site.
4. Where practical, treat the lines by the slug method in accordance with AWWA C651.
5. The following disinfection procedure is considered the minimum that may be used when existing lines are repaired:
   a. Swab the interior of all pipes and fittings (particularly couplings and tapping sleeves) that rare to be used in repairing an existing line with a solution of 5 percent hypochlorite before installing them.
   b. The most practical means of removing contamination introduced into a line during repairs is to give the line a thorough flushing. If the locations of valves and hydrants make it possible, flushing in both directions is recommended. Start flushing as soon as repairs are completed, and continue until all discolored water is eliminated.

END OF SECTION

© 2012 City of Franklin, Tennessee. All rights reserved.

PART 1 - GENERAL

1.1 RELATED DOCUMENTS

A. Drawings and general provisions of the Contract, including General and Supplementary Conditions and Division 01 Specification Sections, apply to this Section.

B. Related Sections include the following:
   1. Division 31 Section "Earthwork" for excavation requirements.
   2. Division 33 Section "Sanitary Sewer (Gravity)."

1.2 SUMMARY

A. This Section includes the following general-duty valves: (All water valves shall be left turn open)
   1. Gate valves.
   2. Plug valves.
   3. Butterfly valves.
   4. Globe valves.
   5. Heavy-duty lever and weight swing check valves.
   6. Air/vacuum valves.
   7. Combination air valves.
   8. Tapping sleeve and valve.
   9. Hose bibbs.
   10. Valve boxes and accessories.
   11. Operators.
   12. Yard hydrants.

B. The following are standard abbreviations for metal and plastic materials:
   1. PVC: Polyvinyl chloride.
   2. DIP: Ductile iron pipe.
   3. HDPE: High-density polyethylene.

C. Buried valves shall have mechanical joint ends.

D. Valves in structures or above ground shall have threaded or flanged ends, unless otherwise noted on the Drawings.

E. Use mechanical joint fitting restraining device for plain end piping connections to fittings, valves, etc.

1.3 REFERENCES

A. ANSI A.21.10 - Standard for Cast Iron Fittings 3 in. through 48 in., for water and other liquids.

B. ANSI A.21.50 - Standard for the Thickness Design of Ductile-Iron Pipe.

C. ANSI B.16.1 - Standard for Cast Iron Pipe Flanges and Flanged Fittings.

© 2012 City of Franklin, Tennessee. All rights reserved.

D. C115/A21.15 - Standard for Flanged Ductile Iron.

E. ANSI-C-606 - Standard for Joints, Grooved and shouldered Type Fittings.

F. AWWA C208 - Hydrostatic Testing of Steel Pipe.

G. ANSI B.31 - Pressure Piping.

1.4 SUBMITTALS

A. Product Data: For each type of valve indicated, include body, seating, and trim materials; valve design; pressure and temperature classifications; end connections; arrangement; dimensions; and required clearances. Include list indicating valve and its application. Include rated capacities; shipping, installed, and operating weights; furnished specialties; and accessories.

B. Action Submittals:
   1. Shop Drawings:
      a. Product data sheets for each make and model. Indicate valve Type Number, applicable Tag Number, and facility name/number or service where used.
      b. Complete catalog information, descriptive literature, specifications, and identification of materials of construction.
      c. Sizing calculations for open-close/throttle and modulating valves.

C. Informational Submittals:
   1. Manufacturer's Certificate of Compliance for:
      a. Electric operators; full compliance with AWWA C540.
      b. Butterfly valves; full compliance with AWWA C504.
   2. Tests and inspection data.
   3. Operation and maintenance data.
   4. Manufacturer's Certificate of Proper Installation.

1.5 QUALITY ASSURANCE

A. Product Options: Drawings indicate size, profiles, and dimensional requirements of piping and specialties and are based on the specific system indicated.

B. Comply with regulatory requirements of local, state, and federal agencies having jurisdiction.

C. Piping material shall bear label, stamp, or other markings of specified testing agency.

D. Comply with ASTM F645 for selection, design, and installation of thermoplastic water piping.

E. Comply with NSF 61 for materials for water service piping and specialties for domestic water.

1.6 DELIVERY, STORAGE, AND HANDLING

A. Delivery:
   1. Prepare valves according to the following:
      a. Ensure that valves are dry and internally protected against rust and corrosion.
      b. Protect valves against damage to threaded ends and flange faces.

© 2012 City of Franklin, Tennessee. All rights reserved.

c. Set valves in best position for handling. Set valves to closed to prevent rattling.

2. Deliver valves with factory-applied end caps. Maintain end caps through shipping, storage, and handling to prevent valve-end damage and to prevent entrance of dirt, debris, and moisture.

B. Storage:

1. Use precautions for valves according to the following:
   a. Do not remove end protectors unless necessary for inspection. Following inspection, reinstall for storage.
   b. Protect from weather. Store indoors and maintain temperature higher than ambient dew-point temperature. When outdoor storage is necessary, support valves off the ground or pavement in watertight enclosures.

C. Handling:

1. Use sling to handle valves and fire hydrants if size requires handling by crane or lift. Rig valves to avoid damage to exposed parts. Do not use hand wheels or stems as lifting or rigging points.
2. Protect flanges, fittings, and specialties from moisture and dirt.

1.7 GENERAL REQUIREMENTS

A. Water valves should generally be spaced a maximum of 1,000' along a water main and on all lines at each intersection, and should be located on the right- of-way line extended. In commercial districts valves should be located at not more than 500 foot intervals.

B. Air release valves or combination air relief valves must be provided at high points in proposed transmission mains.

C. Wastewater valves should be located at agreed upon locations between the Engineer and the WMD.

PART 2 - PRODUCTS

2.1 VALVES, GENERAL

A. In other Part 2 articles where subparagraph titles below introduce lists, the following requirements apply for product selection:

B. Refer to Part 3 “Valve Applications” Article for applications of valves.

C. All valves to include operator, actuator, handwheel, chainwheel, extension stem, floor stand, worm and gear operator, operating nut, chain, wrench, and accessories for complete operation.

D. Valve to be suitable for intended service. Renewable parts not to be of a lower quality than specified.

E. Valve Sizes: Same as upstream pipe, unless otherwise indicated.

F. Valve ends to suit adjacent piping.

© 2012 City of Franklin, Tennessee. All rights reserved.

G. Size operator to operate valve for the full range of pressures and velocities.

H. Factory mount operator, actuator, and accessories.

I. Valve Actuators:
   1. Chainwheel: For attachment to valves, of size and mounting height, as indicated in the "Valve Installation" Article in Part 3.
   2. Gear Drive: For quarter-turn valves NPS 8 (DN 200) and larger.
   3. Handwheel: For valves other than quarter-turn types.
   4. Lever Handle: For quarter-turn valves NPS 6 (DN 150) and smaller, except plug valves.
   5. Wrench: For plug valves with square heads. Furnish Owner with one wrench for every ten plug valves, for each size square plug head.

J. Factory Finishing
   1. Exposed Valves:
      a. Safety isolation valves and lockout valves with handles, handwheels, or chainwheels shall be "'Safety Yellow."
      b. Paint color shall be the same as the pipe.

2.2 GATE VALVES

A. Resilient Seated – 2-inch through 10-inch
   1. Valves shall conform to the latest revision of AWWA Standard C-509 or C-515 covering resilient seated gate valves. Valves shall have a design working pressure of 200 psi.
   2. The valves shall have a cast or ductile iron body, bonnet, and O-ring plate. The wedge shall be totally encapsulated with rubber.
   3. The sealing rubber shall be permanently bonded to the wedge to meet the requirements of ASTM D429.
   4. Valves shall be supplied with O-ring seals at all pressure retaining joints. No flat gaskets shall be allowed. Blind bolts shall not be allowed.
   5. The valves shall be non-rising stem, open by turning left, and provided with a 2-inch square operating nut for buried valves or handwheel for above-ground valves with the word "Open" and an arrow to indicate the direction to open.
   6. Buried valves shall have mechanical joint connections and shall have all exterior surfaces shop painted with two coats of Fed. Spec. TT-V-51F asphaltic varnish. Any valve over 6 feet deep shall have an extension stem projecting within 2 feet of the ground surface and the stem extension shall be centered in the valve box and anchored to prevent horizontal movement and pinned to the valve nut below. The valve manufacturer shall provide all glands, gaskets, and all the accessories necessary to install the valve.
   7. Stems for NRS assemblies shall be cast bronze or 316 stainless steel with integral collars in full compliance with AWWA. OS&Y (rising stems) shall be bronze or 316 stainless steel. All stems shall operate with bronze stem nuts independent of wedge and of stem (in NRS valves). NRS stems shall have two O-rings located above thrust collar and one O-ring below. Stem O-rings shall be replaceable with valve fully opened and subject to pressure. The NRS stems on 4-inch through 12-inch valves shall also have two low torque thrust bearings located above and below the stem collar to reduce friction during operation.

© 2012 City of Franklin, Tennessee. All rights reserved.

8. The waterway shall be smooth, unobstructed, and free of all pockets, cavities, and depressions in the seat area. Tapping valves 4-inch and larger shall accept a full size tapping cutter.
9. The body, bonnet, and O-ring plate shall be fusion-bonded epoxy coated. For the body and bonnet, both interior and exterior shall be coated. Epoxy coating shall be NSF approved and applied in accordance with ANSI/AWWA C-550.
10. Valves operating at a pressure of 160 psi or greater shall be faced and drilled ANSI B16.1 250-pound. Valves operating at less than 160 psi shall be faced and drilled ANSI B16.1 125-pound.
11. Each valve shall have the manufacturer's name, pressure rating, and year in which it was manufactured cast in the body. Prior to shipment from the factory, each valve shall be tested by hydrostatic pressure equal to the requirements of AWWA C-509 for cast iron bodies and C-515 for ductile iron bodies (and UL/FM where applicable).
12. Valves shall have all component parts cast and assembled in the USA.
13. Model/Manufacturer:
    a. Mueller 2360 Series Resilient Wedge/Mueller; Decatur, IL
    b. American Flow Control Series 2500 Resilient Wedge/ American Flow Control; Birmingham, AL
    c. M&H Valve Company; Anniston, AL
    d. Approved equal.

2.3 PLUG VALVES

A. Eccentric

1. Valves shall be of the 90 degree turn, non-lubricated eccentric type with resilient faced plugs and shall be furnished with end connections as shown on the drawings. Flanged valves shall be faced and drilled to the ANSI 125/150 lb. standard. Mechanical Joint ends shall be to the AWWA Standard C111-64, grooved ends per AWWA C-606-87. Screwed ends shall be to the NPT standard.
2. Valve bodies shall be of ASTM A126 Class B cast iron. Bodies in 4" and larger valves shall be furnished with a 1/8" welded overlay seat of not less than 90% pure nickel, machined to mate with the resilient faced plug. Valves that do not provide positive mating of the resilient faced plug with the nickel seat shall not be acceptable. Seat area shall be raised, with raised surface completely covered with weld to insure that the plug face contacts only nickel. Screwed-in seats shall not be acceptable.
3. True eccentric action shall be required. Design of the valve shall provide for a rectangular port that allows contact between the welded nickel seat and the plug to occur only in the final 3 degrees of the plug movement. Round ported valves as well as other non-eccentric action valves shall not be acceptable. If requested, the manufacturer shall provide a complete site visit to the manufacturing facility for the owner, engineer and contractor to witness the eccentric action of partially assembled valves and to verify the size and shape of the port area as well as the welded nickel seat.
4. Plugs shall be of ASTM A126 Class B cast iron. The plug shall have a cylindrical seating surface eccentrically offset from the center of the plug shaft. The interference between the plug face and the body seat, with the plug in the closed position, shall be externally adjustable in the field with the valve in line under pressure. The plug shall be completely coated with a chloroprene compound suitable for use with sewage. The plug coating shall be applied at the factory to insure that the plug is completely coated and then heat-treated to insure a positive bond.
5. Valves shall have sleeve type metal bearings and shall be of sintered, oil impregnated permanently lubricated type 316 ASTM A743 Grade CF-8M in ½"-36" sizes. In valves larger than 36", the upper and lower plug journals shall be fitted with ASTM A-240

© 2012 City of Franklin, Tennessee. All rights reserved.

type 316 stainless sleeves with bearings of ASTM B30, Alloy C95400 aluminum bronze. Non-metallic bearings shall not be acceptable.

6. Valves shaft seals shall be of the multiple V-ring type and shall be externally adjustable and repackable without removing the bonnet or actuator from the valve under pressure. Valves utilizing O-ring seals or non-adjustable packing shall not be acceptable.
7. Valve pressure ratings shall be 175 psi through 12" and 150 psi for 14" through 72". Valves shall provide drip-tight shutoff up to the full pressure rating with pressure in either direction. Each valve shall be given a hydrostatic and seat test with the test results being certified in accordance with ANSI B16.1. If requested, the manufacturer shall provide a complete site visit to the manufacturing facility for the owner, engineer and contractor to witness the testing process.
8. Full Port Plug Valves shall be rectangular port design with minimum 100% open port area as defined as the geometric open port area of the plug valve that is greater than or equal to the open area of the connecting pipe. Manufacturers using Cv values to determine port opening area shall not be considered.
9. Valve actuators for manual valves shall have lever or gear actuators and tee wrenches, extension stems, floorstand, extended bonnet, etc. as indicated on the plans. All extended bonnets must have gear located at the operator – stem extensions with handwheel operators are not an acceptable equivalent. All valves 6" and larger shall be equipped with gear actuators. All gearing shall be enclosed in a semi-steel housing and be suitable for running in a lubricant with seals provided on all shafts to prevent entry of dirt and water into the actuator. The actuator shaft and the quadrant shall be supported on permanently lubricated bronze bearings. Actuators shall clearly indicate valve position and an adjustable stop shall be provided to set closing torque and to provide seat adjustment to compensate for change in pressure differential or flow direction change. All exposed nuts, bolts and washers shall be zinc plated.
10. Valve and gear actuators for buried or submerged service shall have seals on all shafts and gaskets on the valve and actuator covers to prevent the entry of water. Actuator mounting brackets for buried or submerged service shall be totally enclosed and shall have gasket seals. All exposed buts, bolts and washers shall be stainless steel.
11. All eccentric plug valves and actuators shall be as manufactured by DeZURIK, Sartell, MN, Pratt, Aurora, IL, or Engineer approved equal.

2.4 BUTTERFLY VALVES

A. Butterfly valves are used for water lines 12 inches and larger. Valves shall meet or exceed the latest revision of AWWA Standard C504 for Class 150B butterfly valves and shall meet or exceed the requirements of this specification. All valves shall be tested at and shall be capable of withstanding bi-directional line hydrostatic test pressures up to 150 psi without leaking. All valve components shall conform to Underwriters Laboratories classification in accordance with ANSI/NSF Standard 61.

B. Valve bodies shall be of cast iron per ASTM A126 Class B. Flanged end valves shall be of the short body design with 125 lb. flanged ends faced and drilled per ANSI B16.1 standard for cast iron flanges. Mechanical joint end valves shall meet the requirements of AWWA C111/ANSI 21.11. All accessories (bolts, glands, and gaskets) shall be provided by the same manufacturer.

C. Disc shall be offset to provide an uninterrupted 360-degree seating edge and shall be cast iron per ASTM A48, Class 40C. The disc seating edge shall be solid 316 stainless steel. Sprayed mating seating surfaces are not acceptable. The disc shall be securely attached to the valve shaft utilizing a field removable/replaceable 304 stainless steel torque screw on sizes 3-inch

© 2012 City of Franklin, Tennessee. All rights reserved.

through 12-inch, a tangential pin locked in place with a set screw on sizes 4-inch through 20-inch, or 304 stainless steel taper pins on valves 24-inch and larger.

D. Valve shaft shall be 304 stainless steel. Valve shafts seals shall be self-compensating V-type packing with a minimum of four (4) sealing rings. One-piece molded shaft seal and O-ring shaft seals are not acceptable.

E. Seat shall be of Buna-N for water, or as required for other services, and shall be molded in and vulcanized to the valve body. The seat shall contain an integral shaft seal protecting the valve bearings and packing from any line debris. For valves 24- inch and larger, the seat shall be retained within a dovetail groove in the valve body and locked in place by an epoxy compound wedge. Compression between the seat and disc edge shall be adjustable from both the upstream and downstream side of the valve disc. The seat shall be field replaceable without disassembly of the disc and shaft. Seats vulcanized to cartridge inserts in the valve body and seats on the disc are not acceptable.

F. Valve shaft bearings shall be non-metallic and permanently lubricated.

G. Interior and exterior metallic surfaces shall be shop painted per the latest revision of AWWA C504 unless otherwise indicated. The interior of the body shall have a full rubber lining vulcanized to the valve body. Mechanical joint valves shall be fully rubber lined to the point of pipe insertion. Rubber lining on the flange face and boot style seats is not acceptable.

H. Valve actuator shall be sized to operate the valve at the rated working conditions of the valve, and shall be as shown on the Drawings. Ten position locking levers shall be available for 3-inch through 6-inch valves. Provisions must be made for locking in any of the ten positions using a standard padlock.

I. Model/Manufacturer:
   1. Model BAW Butterfly Valves/DeZURIK; Sartell, MN
   2. Groundhog Buried Service Butterfly Valve/Henry Pratt Co.; Aurora, IL
   3. Lineseal III/Mueller Co. Water Products Division
   4. Approved equal.

2.5 GLOBE VALVES

A. The valve shall regulate flow in a pipeline. It's most frequent use is as a sampling valve where it is normally shut except when samples are taken.

B. Bronze globe valves, general: MSS SP-80, with ferrous-alloy handwheel.

C. Type 2, Class 150, bronze globe valves: bronze body with PTFE or TFE disc and union-ring bonnet.

2.6 HEAVY-DUTY LEVER AND WEIGHT SWING CHECK VALVES

A. The valve shall smoothly swing open and close quickly to prevent flow reversal. When closed, the valve shall seat drop tight.

B. The valve shall exceed the minimum requirements of AWWA C508 with a heavy duty body of high-strength cast iron conforming to ASTM A126 Class B with integral flanges. The

© 2012 City of Franklin, Tennessee. All rights reserved.

valve shall be suitable for horizontal or vertical installation. Valves operating at pressures less than 150 psi shall be faced and drilled per ANSI B16.1 Class 125. Valves operating at pressures of 150 psi or greater shall be faced and drilled per ANSI B16.1 Class 250.

C. The valve body shall be the full waterway type, designed to provide a net flow area not less than the nominal inlet pipe size when swung open no more than 25 degrees. The valve shall have a replaceable stainless steel body seat and a cast iron disc faced with a renewable resilient seat ring of rubber or other suitable material. The seat ring shall be held in place by stainless steel screws.

D. The disc arm shall be ductile iron or steel. The disc arm shall be suspended from and keyed to an austenitic stainless steel shaft that is completely above the waterway. The shaft shall be supported at each end by heavy bronze bushings. The shaft shall rotate freely without the need for external lubrication. The shaft shall be sealed where it passes through the body by means of a stuffing box and adjustable packing. Simple O-ring shaft seals are not acceptable.

E. The valve shaft shall have the following size for the given valve sizes:

Valve Size (Inches)	Shaft Diameter (Inches)
3	3/4
4	7/8
6	1
8, 10	1-1/4
12	1-1/2
14, 16, 18, 20	2
24	2-3/4

F. Model/Manufacturer:
1. Figure 220, 221, or 222 Lever and Weight/GA Industries, Inc.; Mars, PA
2. Approved equal.

2.7 AUTOMATIC AIR RELEASE VALVES

A. Manufacturer / Model
1. APCO / 200A
2. Crispin / A.R. Series
3. Approved Equal

2.8 AIR VACUUM VALVES

A. The Air/Vacuum valve shall be capable of exhausting air at up to sonic velocity without blowing shut during the filling of the pipeline or system. The valve shall automatically close when water fills the valve and remain closed while the system is pressurized but open automatically to admit air during draining or a negative pressure condition. The Air/Vacuum valve shall fully conform to AWWA C512 (latest revision).

© 2012 City of Franklin, Tennessee. All rights reserved.

B. The valve shall be of the size shown on the Drawings with a venting orifice no smaller than the nominal valve size. Valves 3-inch and smaller shall have an NPT inlet connection; valves 4-inch and larger shall have a flanged inlet. Valves 4-inch and smaller shall have NPT outlet connection, and unless specified otherwise, larger valves shall be supplied with a protective cowl on the outlet. Additional plugged NPT connections shall be provided near the top and bottom for testing and draining.

C. ANSI Class 125 flanged valves shall have a minimum 150 psi pressure rating, and NPT or ANSI Class 250 flanged valves shall have a minimum 300 psi pressure rating.

D. Materials of Construction:
1. The valve body and cover shall be made from cast iron conforming to ASTM A126 Class B. The cover shall be bolted to the body, and all internal components shall be replaceable through the cover.
2. The float ball shall be spherical and made from Type 316 stainless steel. Non-metallic float balls are not acceptable.
3. The seat shall be replaceable and made from Buna-N rubber or other suitable elastomer compounds.
4. The exterior of the valve shall be shop coated with enamel primer.

E. When shown on the Drawings, the valve shall have a flanged outlet connection.

F. Model/Manufacturer:
1. Figure 930/GA Industries, LLC, Cranberry Township, PA
2. Approved equal

2.9 COMBINATION AIR VALVES

A. Combination air valves shall be designed such that they allow large volumes of air to escape out of a large orifice when filling a pipeline and close when liquid enters the valve. In addition, they shall be designed such that a small orifice allows the release of small pockets of air.

B. The valves shall allow large volumes of air to enter the pipeline during drainage to break the vacuum and prevent water column separation.

C. The valves shall be designed such that premature valve shut-off due to rushing air and water forces is prevented.

D. Valve operation shall be automatic.

E. The valves shall be constructed of corrosion resistant materials, be capable of operating with a working pressure of 200 psi, and provide drop-tight shut-off.

F. Model/Manufacturer:
1. ARI Model D-040/ARI Flow Control Accessories
2. Approved equal

2.10 TAPPING SLEEVES AND VALVES

A. General:

© 2012 City of Franklin, Tennessee. All rights reserved.

1. On water mains 12" and smaller, tapping sleeve shall be stainless steel type or mechanical joint type.
2. On water mains 12" and larger, tapping sleeve shall be ductile iron type.
3. Valves shall conform with "Gate Valves" listed herein.

B. Stainless Steel Type:
1. Sleeve shall be Type 304 Stainless Steel with test plug. "Waffle" 360° gasket with integral gap bridge. Outlet flange with dimensions and drilling that comply with ANSI B16.1, class 125 and with MSS SP-60.
2. Manufacturers:
   a. Mueller Co., Water Products Division
   b. Approved equal.

C. Ductile iron type:
1. Sleeve shall be type shall be full sleeve mechanical joint manufactured from ductile iron meeting ASTM A536, Grade 65-45-12. Outlet flange with dimensions and drilling that comply with ANSI B16.1, class 125 and with MSS SP-60.
2. Manufacturers:
   a. Mueller Co., Water Products Division
   b. American Cast Iron Pipe Co., American Flow Control Division
   c. Approved equal.

D. Tapping Valve:
1. Resilient wedge type with non rising stem. Conforms to all applicable parts of ANSI/AWWA C500 and C509 Standards. One end flanged with alignment lip to attach to tapping sleeve.
2. Manufacturers/Model:
   a. Mueller Co., Water Products Division, Model T2360
   b. Approved equal.

2.11 HOSE BIBBS

A. Hose bibb shall be rough bronze body, with wheel handle, renewable composition disc, 1/2- or 3/4-inch threaded or solder-joint inlet. Provide ASME B1.20.7 garden-hose threads on outlet and integral or field-installed, nonremovable, drainable, hose connection vacuum breaker.

2.12 VALVE BOXES AND ACCESSORIES

A. Valve boxes shall consist of precast concrete risers with cast iron frames and covers. Valve box risers shall be pre-cast concrete made accurately to the required dimensions, and shall be sound, smooth, clean and free from blisters and other defects. Defective castings which have been plugged or otherwise treated to remedy defects shall be rejected. Contact surfaces of frames and covers shall be machined so that the covers rest securely in the frames with no rocking and with the cover in contact with the frames for the entire perimeter of the contact surface.
1. Manufacturers:
   a. Hula Concrete Products, Hickman TN
   b. Approved equal.

B. Install valve boxes on each proposed valve in accordance with the details shown on the standard drawings.

© 2012 City of Franklin, Tennessee. All rights reserved.

C. Frames for reclaimed water valves are round.

D. Cast iron frame and cover shall be roadway type for other applications. Unless otherwise instructed by Resident Project Representative, furnish frame and covers specified below.
   1. Manufacturers/Model:
      a. John Bouchard No. 8006
      b. Vulcan No. V-8455

2.13 MANUAL OPERATORS

A. General:
   1. Valves for water and wastewater service shall open to the left.
   2. Valves for reclaimed water service shall open to the right.
   3. Operator force not to exceed 40 pounds under any operating condition, including initial breakaway. Gear reduction operator when force exceeds 40 pounds.
   4. Operator self-locking type or equipped with self-locking device.
   5. Position indicator on quarter-turn valves.
   6. Worm and gear operators one-piece design worm-gears of gear bronze material. Worm hardened alloy steel with thread ground and polished. Traveling nut type operators threader steel reach rods with internally threaded bronze or ductile iron nut.

B. Exposed Operator:
   1. Galvanized and painted handwheels.
   2. Lever operators allowed on quarter-turn valves 8 inches and smaller.
   3. Cranks on gear type operators.
   4. Chain wheel operator with tiebacks, extension stem, floor stands, and other accessories to permit operation from normal operation level.
   5. Valve handles to take a padlock, and wheels a chain and padlock.

C. Buried Operator:
   1. Buried service operators on valves larger than 2-1/2 inches shall have a 2-inch AWWA operating nut. Buried operators on valves 2 inches and smaller shall have cross handle for operation by forked key. Enclose moving parts of valve and operator in housing to prevent contact with the soil.

PART 3 - EXECUTION

3.1 EXAMINATION

A. Examine piping system for compliance with requirements for installation tolerances and other conditions affecting performance.
   1. Proceed with installation only after unsatisfactory conditions have been corrected.

B. Examine valve interior for cleanliness, freedom from foreign matter, and corrosion. Remove special packing materials, such as blocks, used to prevent disc movement during shipping and handling.

C. Operate valves in positions from fully open to fully closed. Examine guides and seats made accessible by such operations.

D. Examine threads on valve and mating pipe for form and cleanliness.

© 2012 City of Franklin, Tennessee. All rights reserved.

E. Examine mating flange faces for conditions that might cause leakage. Check bolting for proper size, length, and material. Verify that gasket is of proper size, its material composition is suitable for service, and it is free from defects and damage.

F. Do not attempt to repair defective valves; replace with new valves.

3.2 VALVE INSTALLATION

A. Piping installation requirements are specified in other Division 33 Sections. Drawings indicate general arrangement of piping, fittings, and specialties.

B. All valves and appurtenances shall be installed in strict conformance with the Drawings and manufacturer's instructions.

C. Location of Valves:
   1. In water mains, valves shall be located on the street right-of-way(R.O.W.) where possible.
   2. Valves should installed be no more than 1,000 feet apart.
   3. Need to place a valve at each T of an intersection. For example: if at a 3 way intersection you need 3 valves and at a 4 way intersection you need to have 4 valves.

D. Locate valves for easy access and for routine operation and maintenance. Provide separate support where necessary.

E. Install valves so handles operate from fully opened to fully closed without encountering obstructions.

F. Valves shall be installed in such a way that operators and packing are easily accessible. Valves with field replaceable seats shall be installed with sufficient clearance to permit removal of the valve bonnet and stem without removing the valve from the line.

G. Install valves in horizontal piping with stem at or above the center of pipe. Operators shall be positioned so that they do not interfere with pedestrian traffic. In passageways or above platforms, the minimum clearance between the floor and the lowest protruding point on the valve or operator shall be six feet, eight inches (6'-8"). All valves shall be accessible for operation, maintenance, or removal.

H. Positioners or actuators shall be provided special support where they overhang from the valve or where the total valve, actuator, and position weight is excessive for the size of the pipeline.

I. Install valves with unions, dismantling joints, or flanged coupling adapters at each piece of equipment arranged to allow service, maintenance, and equipment removal without system shutdown.

J. Install valves in position to allow full stem movement.

K. Install check valves for proper direction of flow and as follows:
   1. Swing Check Valves: In horizontal position with hinge pin level.
   2. Single-Plate Check Valves: In horizontal or vertical position, between flanges.
   3. Lift Check Valves: With stem upright and plumb.

© 2012 City of Franklin, Tennessee. All rights reserved.

L. Install chainwheel operators on valves 4-inches and larger and more than 7 feet above the floor. Extend chains to 5 feet above finished floor elevation.

M. Extension Stem for Operator: Where the depth of the valve is such that its centerline is more than 5 feet below grade, furnish an operating extension stem with 2-inch operating nut to bring the operating nut to a point 12 inches below the surface of the ground and/or box cover.

3.3 TESTING AND INSPECTION

A. Valve may either be tested while testing pipelines or as a separate step.

B. Following installation, the Contractor shall test that all valves open and close smoothly under anticipated operating conditions. The ability of the valves to operate properly without leakage, binding, sticking, fluttering, or excessive operating torque shall be demonstrated to the satisfaction of the Resident Project Representative. The Contractor shall at his own expense adjust and/or replace any valve as necessary to ensure satisfactory operation.

C. Count and record the number of turns to open and close the valve. Account for any discrepancies with the manufacturer's data.

D. Automatic valves to be tested in conjunction with control system testing.

3.4 MANUFACTURER'S SERVICES

A. Manufacturer's authorized representative shall be present at the jobsite for a minimum of one day (excluding travel time) for installation assistance and inspection.

B. Manufacturer's authorized representative shall be present at the jobsite for a minimum of one day (excluding travel time) for equipment start-up, functional and performance testing, and to train Owner's personnel in the operation, maintenance, and troubleshooting of the equipment provided.

3.5 ADJUSTING

A. Adjust or replace valve packing after piping systems have been tested and put into service but before final adjusting and balancing. Replace valves if persistent leaking occurs.

END OF SECTION

© 2012 City of Franklin, Tennessee. All rights reserved.

PART 1 - GENERAL

1.1 SCOPE

A. Work covered by this section includes furnishing all materials, labor, and equipment required to furnish, install, and test fire hydrants and yard hydrants and accessories as specified herein and/or shown on the Drawings.

1.2 SHOP DRAWINGS AND ENGINEERING DATA

A. Complete shop drawings and engineering data shall be submitted to the Owner.

1.3 STORAGE AND PROTECTION

A. Hydrants shall be stored and protected in accordance with manufacturer's requirements.

1.4 SHOP PAINTING

A. Hydrants and accessories shall be cleaned, shop primed, and shop painted as specified herein.

1.5 OPERATION AND MAINTENANCE DATA

A. Submit complete operation and maintenance data on the hydrants to the Owner.

1.6 GUARANTEE

A. Provide a guarantee against defective or deficient equipment and workmanship.

1.7 QUALITY ASSURANCE

A. The manufacturer of the fire hydrants shall furnish a written certification to the Owner that all hydrants furnished comply with all applicable requirements of AWWA C502, latest edition.

1.8 GENERAL REQUIREMENTS

A. A fire hydrant shall be installed at the end of 6" and larger dead end water mains for flushing purposes.

B. Public hydrants are those owned by the WMD.

C. The number and spacing of hydrants shall be in accordance with the International Fire Code as adopted.

D. All public fire hydrants shall be installed at street intersections where possible.

E. Public hydrant spacing shall be measured along vehicle access routes.

F. The fire department will review all hydrant locations.

© 2012 City of Franklin, Tennessee. All rights reserved.

PART 2 - PRODUCTS

2.1 FIRE HYDRANTS

A. Manufacturers
   1. American Darling 51/4", B-84-B-5
   2. Approved Equal

B. Fire hydrants shall be of the dry-barrel, compression type and shall conform to applicable requirements of AWWA C502, latest edition. Fire hydrants shall be cast iron, bronze mounted, suitable for a working pressure of 200 psi. Name of the manufacturer and size of the main valve shall be cast upon the hydrant in raised letters.

C. Hydrants shall be constructed in a manner that will permit withdrawal of internal working parts without disturbing the barrel or casing. Valve shall be compression type, opening against pressure and so constructed that the main valve will remain closed should the hydrant be broken off by traffic accident. Valve opening shall be at least 5-1/4 inches in diameter and shall have a net area of waterway at the smallest part of not less than 120 percent of the valve opening when the valve is wide open. There shall be no chattering or water hammer under any conditions of operation.

D. Barrel shall be made in two pieces with flanged joint above the finished grade or ground line. Lower barrel shall be fluted for strength and tapered to prevent frost heave. Ground line flange shall be of the break-away type. Two positive acting, bronze fitted drain valves shall be provided in the hydrant shoe automatically to open and provide rapid and complete drainage of the hydrant barrel when the main valve is closed.

E. Hydrant bonnet shall be designed to protect the operating head against rust, corrosion, and dirt. The stuffing box shall have bronze glands and O-ring seal. Suitable means shall be provided for lubricating the stem threads, O-ring, and bearing surfaces in the bonnet.

F. The main valve rod shall be of steel and shall be bronze sheathed where it passes through the stuffing box. Stem shall be equipped with a two-piece safety or breakable stem coupling to prevent damage to the stem when hydrant is hit by a vehicle. A positive stop shall be provided to permit full opening of the valve and prevent over-travel of the stem.

G. Direction of opening shall be counterclockwise and shall be cast on the head. Operating nut shall be National Standard, 1-1/2-inch, pentagon shaped.

H. Two 2-1/2-inch hose nozzles and one 4-1/2-inch pumper nozzle shall be provided on each hydrant. Hose and pumper nipples shall be of bronze or non-corrosive metal, and threads shall be National Standard in accordance with NFPA Standard No. 194. Nipple caps shall be securely chained to the barrel with galvanized, non-kinking chains.

I. Hydrants that are to be connected to ductile iron pipe shall be equipped with mechanical joint inlet with restrained joint gland, gaskets, bolts, and nuts. Suitable ring-tight or fluid-tight inlets shall be provided on hydrants that are to be connected to cement asbestos pipe. Inlet bell shall have two lugs for harness restraint.

© 2012 City of Franklin, Tennessee. All rights reserved.

J. After fabrication, all exterior aboveground ferrous surfaces shall be blast-cleaned and painted at the shop with one coat of zinc chromate primer conforming to Federal Specification TT-P-636 and one coat of compatible alkyd enamel. Color shall be fire hydrant yellow. All interior and belowground, non-machined ferrous surfaces shall be blast-cleaned and painted at the shop with two coats of asphaltic varnish conforming to Federal Specification TT-V-51c.

K. Fire hydrants shall be as manufactured by Mueller, "Super Centurion" No. A423, American Darling, or approved equal.

2.2 YARD HYDRANTS

A. Hydrants shall only be installed by owner at a pump station, lift station, or a booster station.

B. Yard hydrants shall be of the nonfreezing, compression, post type hydrant with self-draining barrel as manufactured by Zurn Industries, Model Z1390 or approved equal. Yard hydrants shall be suitable for 125 psi static pressure.

C. Yard hydrants shall have a brass casing and base, bronze seats, resilient-faced disc, O-ring stem seal, bronze or stainless steel stem, and galvanized steel barrel.

D. Yard hydrants shall be furnished with 2-inch threaded female inlet connection per ANSI B2.1 and threaded 1-1/2-inch male outlet hose connection. A “T” or wheel handle shall be furnished to operate the valve.

E. All internal working parts shall be readily accessible and removable through the top for ease of maintenance.

F. Contractor shall provide 10 1-inch by 3/4-inch brass adapters for use on yard hydrants.

2.3 SPARE PARTS

A. The following spare parts shall be furnished for hydrants furnished under this section, where applicable:

1.	Packing, O-rings, and Gaskets	One set each hydrant
2.	Main Valve Disc	One each hydrant
3.	Drain Valve Facing	One each hydrant
4.	Break-away Flange Repair Kit	One set with Stem Coupling
5.	Seat Wrench	One each type required
6.	Lubricants	One year supply

B. Spare parts shall be suitably protected against corrosion and impact to withstand long-term storage. Parts shall be clearly identified with the manufacturer's name and number and the equipment to which they belong.

PART 3 - EXECUTION

3.1 FACTORY TESTING

© 2012 City of Franklin, Tennessee. All rights reserved.

A. Each hydrant shall be tested at the factory at a hydrostatic pressure of 300 psig in accordance with AWWA C502, Section 5. Hydrants shall be tested in both the open and closed positions. Hydrants shall be completely drained and closed before shipment.

3.2 INSTALLATION

A. Hydrants shall be installed at the locations and in the manner shown on the Drawings. Hydrants shall be inspected, cleaned, and tested for operation prior to installation.

B. Fire hydrants shall be installed 3 feet to 7 feet from the sidewalk.

C. Fire hydrants shall be isolated from the water supply main with a buried gate valve not less than 6 inches in size. Hydrants shall be installed in a suitable rock drain and anchored against thrust according to the Specifications. Upper barrel joint shall be located approximately 2 inches above ground level. Barrel extensions shall be furnished as necessary.

D. Each yard hydrant shall be isolated from the water supply by a 1-inch curb stop as shown on the Drawings.

E. After installation, each valve shall be tested in the presence of the Owner for proper operation and leak-tightness. Any leaks shall be corrected.

F. Following installation and testing, exposed ferrous surfaces of hydrants shall be field painted with alkyd system ferrous metal finish.

END OF SECTION

© 2012 City of Franklin, Tennessee. All rights reserved.

PART 1 - GENERAL

1.1 RELATED DOCUMENTS

A. Drawings and general provisions of the Contract, including General and Supplementary Conditions and Division 01 Sections, apply to this section.

1.2 SUMMARY

A. This section includes water service assembly requirements. Size of service shall be as directed by the Owner. The same products shall apply for service reconnections.
   1. In general, all non-residential service lines, irrigation lines, fire lines shall have an approved backflow prevention device. Backflow prevention devices shall be installed per the City of Franklin Cross Connection Control Plan. Details of this installation shall be approved by the Water Management Department prior to installation. The backflow prevention device shall be installed such that it provides adequate access for testing, is protected from freezing, and is installed in a manner to allow for drainage.
   2. Private fire protection shall have a fire line meter and double check valve assembly (DCA).

B. Related Sections include the following:
   1. Division 31 Earthwork sections for excavation requirements.
   2. Division 32 Section "Pavement Repair" for open trench installation repair work.
   3. Division 33 Section "Trenchless Installation of Utilities" for casing pipe requirements.
   4. Division 33 Section "Water Utility Distribution Piping" for piping requirements.

1.3 SUBMITTALS

A. Product Data:
   1. Tapping Saddles.
   2. Corporation Stops.
   3. Service Pipes.
   4. Curb Stops.
   5. Water Meters.
   6. Meter Boxes.
   7. Water Pressure Regulators.
   8. Reduced Pressure Backflow Preventers (RPBP).
   9. Double Check Valve Assemblies (DCA).

PART 2 - PRODUCTS

2.1 TAPPING SADDLE

A. Tapping saddles shall have double straps or a double wide band and shall be suitable for use with the various pipes at the installation point (i.e. will not cause electrolysis). Tapping saddles shall be provided by the same manufacturer as the corporation valve.
   1. Manufacturer / Model:
      a. Ford Model S270, hinged
      b. Approved equal.

© 2012 City of Franklin, Tennessee. All rights reserved.

2.2 CORPORATION STOP

A. Corporation stop shall be designed and manufactured to conform to AWWA C800-84 and ASTM B-62 which cover thread dimensions, metal alloy (red brass: 85-5-5-5), and pressure rating. Inlet threads shall be AWWA Taper Thread CC. The outlet shall be suitable for the service piping required. Corporation stop shall be directly tapped into the water line/main using a tapping saddle. Insulators shall be used on dissimilar pipes as necessary for protection against electrolysis. For ¾-inch and 1-inch, use a direct tap. For 1 ½-inch and 2-inch, use a tapping saddle. Corporation stop shall be ball valve type suitable for pressures up to 300 psi.
   1. Manufacturer / Model:
      a. Mueller B-25008.
      b. Approved equal.

2.3 SERVICE PIPE

A. Residential service pipe shall be 3/4-inch. Service pipe and fittings, sizes 3/4-inch through 2-inch, shall be of the following material(s):
   1. Copper:
      a. Below Grade: Type K, annealed temper, hard or soft copper tubing in accordance with ASTM B88.
      b. Above Grade: Type M, drawn temper, hard or soft copper tubing in accordance with ASTM B88.
      c. Fittings:
         1) Wrought-copper, solder joint pressure fittings in accordance with ASME B16.22 cast-copper-alloy, solder-joint pressure fittings in accordance with ASME 16.18.
         2) Copper unions shall have cast-copper alloy body, hexagonal stock with ball-and-socket joint, metal-to-metal seating surfaces, and solder-joint, threaded, or solder-joint and threaded ends in Accordance with ASME B16.18. Threaded ends shall have threads in conformance with ASME B1.20.1.
      d. Joining Materials:
         1) Solder filler metal shall be lead free type with 0.20 percent maximum lead content, contain alloys to suit system requirements, and be in accordance with ASTM B32.
         2) Brazing filler metal shall contain alloys to suit system requirements and be in accordance with AWS A5.8, BCuP Series.
         3) Soldering flux shall be water-flushable type in accordance with ASTM B813.

2.4 CURB STOP

A. Curb stop shall be of ball valve type design; watertight in either direction at pressures up to 300 psi; easy turning; non binding; and having minimum pressure loss. Curb stop shall be constructed of a solid one piece tee-head and stem, with sturdy stops, include padlock wings, enclosed and protected, allowing 90 degree motion. Curb stop shall be of a heavy cast bronze

© 2012 City of Franklin, Tennessee. All rights reserved.

body and shall conform to AWWA standard C800 (ASTM B-62 and ASTM B584). Curb stop shall have compression type connections.

1. Manufacturer / Model:
   a. Mueller B-25209.
   b. Approved equal.

2.5 WATER METER

A. Water meters shall be frost-proof, sealed register, rotating disk, cold water displacement type with bronze cast meeting all requirements of ANSI/AWWA C700. Meter registers shall be straight reading in U.S. gallons and be equipped with a device to afford capability for accurately testing the meter in accordance with AWWA Standards. The meters shall be equipped with a removable corrosion resistant strainer screen between the outer case and measuring chamber. The body case shall have the manufacturer's serial number imprinted thereon and have raised markings to indicate the direction of flow. Meter sizes shall be 5/8-inch x 3/4-inch for a 3/4-inch service rated at a flow of 20 gpm, 1-inch for a 1-inch service rated at a flow of 50 gpm, and 2-inch for a 2-inch service rated at a flow of 100 gpm. ¾-inch to 2-inch water meters shall be provide by the city. All meters larger than 2 inches may be installed by the city but at the Contractor's expense. At a minimum, meters shall be rated to withstand a pressure of 150 psi. All meters shall be equipped with Radio Read Technology.

B. Manufacturer / Model:
   1. Sensus Technologies Model SR.
   2. Approved equal.

2.6 METER BOX

A. Meter boxes shall be precast concrete or approved equal. Top cover shall be removable with cast iron meter reading lid. Reading lid shall have lettering "WATER METER". Meter boxes shall be sized based on the meter size and other appurtenances to be included within the box.

B. Manufacturer / Model:
   1. Brooks Product No. 36.
   2. Southern Meter Box.
   3. Approved equal.

2.7 REDUCED PRESSURE BACKFLOW PREVENTER

A. Reduced pressure zone assembly shall be installed at each possible cross-connection to prevent backsiphonage and backpressure backflow of hazardous materials into the potable water supply. If the assembly is installed in a location with more than its rated working pressure, a water pressure regulator shall be installed upstream of the assembly.

B. The assembly shall consist of a pressure differential relief valve located in a zone between two positive seating check valves.

C. Backsiphonage protection shall include provision to admit air directly into the reduced pressure zone via a separate channel from the water discharge channel, or directly into the supply pipe via a separate vent.

© 2012 City of Franklin, Tennessee. All rights reserved.

D. The assembly shall include two quarter-turn ball valves before and after the check valves, test cocks, and air gap.

E. The assembly shall meet the requirements of ASSE Standard 1013; AWWA C-511-92 CSA B64.4 and national plumbing codes.

F. Materials:
1. Check Valve Body: Bronze
2. Check Valve Seat: 909 Celcon
3. Relief Valve Body: Bronze or FDA Epoxy Coated Cast Iron
4. Relief Valve Trim: Stainless Steel
5. Strainer: Bronze or FDA Epoxy Coated Cast Iron

G. Drain lines shall be provided for assembly discharge.

H. Contractor to see approved Cross Connection Control plan at the Water Management Department office.

I. Manufacturer / Model:
1. Watts Industries, Inc. Series 909 with Series 909AG Air Gap.
2. Approved equal.

2.8 DOUBLE-CHECK ASSEMBLY

A. Manufacturers: Subject to compliance with requirements, provide products by one of the following:
1. Watts Industries, Inc.; Water Products Div.
2. Approved equal.

B. Standard: ASSE 1048 and FMG approved or UL listed.

C. Operation: Continuous-pressure applications.

D. Pressure Loss: 5 psig (35 kPa) maximum, through middle 1/3 of flow range.

E. Size: As scheduled on drawings.

F. Design Flow Rate: As scheduled on drawings.

G. Body: Cast iron with interior lining complying with AWWA C550 or that is FDA approved.

H. End Connections: Flanged.

PART 3 - EXECUTION

3.1 PREPARATION

A. Make no service assembly connections without approval from the Owner.

B. No taps shall be made in any size pipe without approval of the Owner.

© 2012 City of Franklin, Tennessee. All rights reserved.

C. All service pipe shall be renewed from the new water line to existing meter location unless otherwise directed by the Drawings or Owner. Where encountered, existing galvanized iron service piping shall be replaced up to a point 10 feet beyond the meter box.

D. Existing service assemblies and meter boxes shall be replaced by new equipment unless otherwise directed by the Drawings or Owner.

E. Service pipe shall be installed and connected to house/building service (at right-of-way or easement) in accordance with national and local plumbing codes, the details shown on the Drawings, and as specified for customer service connections/re-connections.

3.2 INSTALLATION

A. In general, install the meter box as near the property line as possible within the public right-of-way, in the center of the building lot and out of the way of driveways, landscaping, headwalls, etc. The meter box shall have a cast iron frame and cover. Set plumb approximately 1 inch above the existing or proposed grade and so that the surface drainage will not enter it. Fill from the existing or proposed grade to the top of the meter box at a slope of 1:12. When the cut or fill slopes extend beyond the public right-of-way, install the meter box at the top or toe of slope, as applicable, or as directed by the Owner. Place a minimum of 2 cubic feet of clean dirt under each meter box.

B. Set the yoke plumb and level.

C. For connecting the service lines to meter yokes and corporation cocks, use compression type connections.

D. All residential meters shall be installed by the Owner. No meter shall be removed, tampered with, relocated, etc., unless approved by Owner.

E. Where existing water service is proposed to be interrupted by the abandonment/ retirement of an existing water line, Contractor shall reconnect service pipe to the new water line unless otherwise directed by the Drawings or Owner. Service assembly renewal shall be done after successful leakage and bacteriological testing of the new water line has been completed.

F. Service pipe proposed to be installed under paved roads shall be done utilizing trenchless installation methods, unless otherwise directed by the Drawings or Owner. If rock is encountered, the governing roadway Agency should be contacted regarding open cutting the road to install the service pipe. Backfill and pavement repair requirements of the governing roadway Agency shall be followed. In some cases, the proposed service pipe crossing may need to be relocated. Minimum service pipe cover shall be the 36 inches under roadways.

G. Service pipe proposed to be installed parallel to a roadway shall have a minimum pipe cover of 28 inches.

H. Service pipe shall be installed at a minimum depth of 24 inches from the corporation valve to the meter box.

I. After the service pipe and meter setter is installed, turn water on service pipe between meter setter and main, blowing any accumulated trash out of the service pipe.

© 2012 City of Franklin, Tennessee. All rights reserved.

J. A single piece of copper pipe shall be used from the main to the meter unless the meter is over 100 feet from the main.

K. Reduced pressure backflow preventers and double check valve backflow assemblies shall be installed in locations that facilitate testing and servicing, protects against freezing and vandalism, and allows for proper drainage.

L. The meter box is to be installed at a location such that it will not be in a driveway, sidewalk, or under shrubs and trees. If during construction of homes, the meter location conflicts with the location of the driveway, then the meter shall be moved at the expense of the builder or developer. A marker pole shall be installed at the meter box with a minimum of 3 feet in the ground and 2 feet above ground. The above ground portion of the pipe shall be painted blue.

END OF SECTION

© 2012 City of Franklin, Tennessee. All rights reserved.

PART 1 - GENERAL

1.1 RELATED DOCUMENTS

A. Drawings and general provisions of the Contract, including General and Supplementary Conditions and Division 01 Sections, apply to this section.

1.2 SUMMARY

A. This section includes service assembly requirements for 3/4 inch through 2 inch diameter service connections. Size of service shall be as directed by the Owner. The same products shall apply for service reconnections.

B. Related Sections include the following:
1. Division 31 Earthwork sections for excavation requirements.
2. Division 32 Section "Pavement Repair" for open trench installation repair work.
3. Division 33 Section "Trenchless Installation of Utilities" for casing pipe requirements.
4. Division 33 Section "Reclaimed Water Distribution Piping" for piping requirements.

1.3 SUBMITTALS

A. Product Data:
1. Tapping Saddles.
2. Corporation Stops.
3. Service Pipes.
4. Curb Stops.
5. Water Meters.
6. Meter Boxes.

PART 2 - PRODUCTS

2.1 TAPPING SADDLE

A. Tapping saddles shall have double straps or a double wide band and shall be suitable for use with the various pipes at the installation point (i.e. will not cause electrolysis). Tapping saddles shall be provided by the same manufacturer as the corporation valve.
1. Manufacturer / Model:
   a. Ford Model S270, hinged
   b. Approved equal.

2.2 CORPORATION STOP

A. Corporation stop shall be designed and manufactured to conform to AWWA C800-84 and ASTM B-62 which cover thread dimensions, metal alloy (red brass: 85-5-5-5), and pressure rating. Inlet threads shall be AWWA Taper Thread CC. The outlet shall be suitable for the service piping required. Corporation stop shall be directly tapped into the water line/main using a tapping saddle. Corporation stop shall be ball valve type suitable for pressures up to 300 psi.

© 2012 City of Franklin, Tennessee. All rights reserved.

1. Manufacturer / Model:
   a. Mueller B-25008.
   b. Approved equal.

2.3 SERVICE PIPE

A. Residential service pipe shall be 3/4-inch. Service pipe and fittings, sizes 3/4-inch through 2-inch, shall be of the following material(s):
   1. PVC:
      a. Schedule 40 PVC pipe in accordance with ASTM D1785. Schedule 40 PVC fittings in accordance with ASTM D2466. Solvent shall be in accordance with ASTM D2564.

2.4 CURB STOP

A. Curb stop shall be of ball valve type design; watertight in either direction at pressures up to 300 PSI; easy turning; non binding; and having minimum pressure loss. Curb stop shall be constructed of a solid one piece tee-head and stem, with sturdy stops, include padlock wings, enclosed and protected, allowing 90 degree motion. Curb stop shall be of a heavy cast bronze body and shall conform to AWWA standard C800 (ASTM B-62 and ASTM B584). Curb stop shall have compression type connections.
   1. Manufacturer / Model:
      a. Mueller B-252O9.
      b. Approved equal.

2.5 WATER METER

A. Water meters shall be frost-proof, sealed register, rotating disk, cold water displacement type with bronze cast meeting all requirements of ANSI/AWWA C700. Meter registers shall be straight reading in U.S. gallons and be equipped with a device to afford capability for accurately testing the meter in accordance with AWWA Standards. The meters shall be equipped with a removable corrosion resistant strainer screen between the outer case and measuring chamber. The body case shall have the manufacturer's serial number imprinted thereon and have raised markings to indicate the direction of flow. Meter sizes shall be 5/8-inch x 3/4-inch for a 3/4-inch service rated at a flow of 20 gpm, 1-inch for a 1-inch service rated at a flow of 50 gpm, and 2-inch for a 2-inch service rated at a flow of 100 gpm. At a minimum, meters shall be rated to withstand a pressure of 150 psi. All meters shall be equipped with Radio Read Technology.

B. Manufacturer / Model:
   1. Sensus Technologies Model SR.
   2. Approved equal.

2.6 METER BOX

A. Meter boxes shall be rectangular, open bottom with service pipe notches constructed of high impact resistant molded plastic. Meter boxes shall be sized based on the meter size and other appurtenances to be included within the box. Meter box shall be purple to indicate reclaimed water service.

© 2012 City of Franklin, Tennessee. All rights reserved.

B. Manufacturer / Model:
   1. Armor Access Boxes/Plymouth Superflexion 170160.
   2. Approved equal.

PART 3 - EXECUTION

3.1 PREPARATION

A. Make no service assembly connections on empty water lines without approval from the Owner.

B. No taps larger than 1 inch shall be made in any size pipe without approval by the Owner.

C. All service pipe shall be renewed from the new water line to existing meter location unless otherwise directed by the Drawings or Owner. Where encountered, existing galvanized iron service piping shall be replaced up to the location where the tie-in occurs.

D. Existing service assemblies and meter boxes shall be replaced by new equipment unless otherwise directed by the Drawings or Owner.

E. Service pipe shall be installed and connected to house/building service (5 feet from the house) in accordance with national and local plumbing codes, the details shown on the Drawings, and as specified for customer service connections/re-connections.

3.2 INSTALLATION

A. In general, install the meter box as near the property line as possible within the public right-of-way. Set plumb approximately 1 inch above the existing or proposed grade and so that the surface drainage will not enter it. Fill from the existing or proposed grade to the top of the meter box at a slope of 1:12. When the cut or fill slopes extend beyond the public right-of-way, install the meter box at the top or toe of slope, as applicable.

B. Where existing water service is proposed to be interrupted by the abandonment/ retirement of an existing water line, Contractor shall reconnect service pipe to the new water line unless otherwise directed by the Drawings or Owner. Service assembly renewal shall be done after successful leakage and bacteriological testing of the new water line has been completed.

C. Service pipe proposed to be installed under paved roads shall be done utilizing trenchless installation methods, unless otherwise directed by the Drawings or Owner. If rock is encountered, the governing roadway Agency should be contacted regarding open cutting the road to install the service pipe. Backfill and pavement repair requirements of the governing roadway Agency shall be followed. In some cases, the proposed service pipe crossing may need to be relocated. Minimum service pipe cover shall be the 36 inches under roadways.

D. Service pipe proposed to be installed parallel to a roadway shall have a minimum pipe cover of 30 inches.

E. Service pipe shall be installed at a minimum depth of 18 inches from the corporation valve to the meter box.

© 2012 City of Franklin, Tennessee. All rights reserved.

F. After the service pipe and meter setter is installed, turn water on service pipe between meter setter and main, blowing any accumulated trash out of the service pipe.

G. The service pipe shall not be taut from corporation valve to curb valve.

H. Meter setter shall be installed so that the meter is centered and level in the meter box.

END OF SECTION

© 2012 City of Franklin, Tennessee. All rights reserved.

PART 1 - GENERAL

1.1 RELATED DOCUMENTS

A. Drawings and general provision of the Contract, including General and Supplementary Conditions and Division 01 Specification Sections, apply to this Section.

1.2 SUMMARY

A. This Section includes requirements for sanitary sewer (gravity) piping.

B. Related Sections include the following:
1. Division 31 Earthwork Sections for excavation requirements.
2. Division 32 Section "Pavement Repair" for open trench installation repair work.
3. Division 33 Section "Trenchless Installation of Utilities" for casing pipe requirements.

1.3 DEFINITIONS / STANDARDS

A. The following are industry abbreviations for metal and plastic materials:
1. PVC: Polyvinyl chloride plastic.
2. DIP: Ductile iron pipe.
3. HDPE: High Density Polyethylene.
4. CCFRPM: Centrifugally Cast Fiberglass Reinforced Polymer Mortar.
5. PPCDW: Polypropylene Corrugated Double Wall Pipe.

B. Buried piping shall be of the bell and spigot type.

C. Non-buried piping shall have flanged ends, unless otherwise noted on the Drawings.

1.4 SUBMITTALS

Product Data:
1. Ductile Iron Pipe
2. Ductile Iron Fittings
3. Polyvinyl chloride Pipe.
4. Polyvinyl chloride Fittings.
5. High Density Polyethylene (HDPE) Pipe
6. High Density Polyethylene Fittings
7. Centrifugally cast fiberglass reinforced polymer mortar pipe and fittings.
8. Polypropylene Corrugated Double Wall Pipe
9. Polypropylene Corrugated Double Wall Fittings
10. Polypropylene Corrugated Double Wall Stainless Steel Repair Coupler
11. Inserta Tee
12. Polypropylene Corrugated Double Wall Manhole Adapter
13. PVC-U Unplasticised Junction (Fabekun-Junction)
14. Pipe insulation and accessories.
15. Mechanical joint restraint devices.
16. Flanged coupling adapters.
17. Flexible expansion joint.
18. Line markers.

© 2012 City of Franklin, Tennessee. All rights reserved.

19. Utility warning tape.
20. Detection wire.

1.5 QUALITY ASSURANCE

A. Product Options: Drawings indicate size, profiles, and dimensional requirements of piping and specialties and are based on the specific system indicated.

B. Comply with regulatory requirements of local, state and federal agencies having jurisdiction.

C. Piping material shall bear label, stamp, or other markings of specified testing agency.

D. Sewer lines installed in trenches deeper than 6 feet must be discussed with City staff prior to approval.

E. Comply with ASTM F645 for selection, design, and installation of thermoplastic water piping.

F. Comply with ASTM specifications for materials.

G. The pipe manufacturer must furnish the Owner a notarized certificate stating that the pipe furnished has been manufactured and tested in accordance with the applicable standards.

H. Polyvinyl chloride (PVC) and molecularly oriented polyvinyl chloride (PVCO) pipe shall have proper markings which include manufacturer's name or trademark, nominal pipe size and size base, pressure rating for water at 73.4 degrees Fahrenheit, PVC cell classification or material code, dimension ratio or standard dimension ratio, AWWA or ASTM designation, pressure class with which the pipe complies, and the National Sanitation Foundation (NSF) Seal of Approval for drinking water (when applicable).

I. Centrifugally Cast Fiberglass Reinforced Polymer Mortar Pipe Materials
   1. Resin Systems: The manufacturer shall use polyester resin systems with a proven history of performance in this particular application. The historical data shall have been acquired from a composite material of similar construction and composition as the proposed product.
   2. Glass Reinforcements: The reinforcing glass fibers used to manufacture the components shall be of the highest quality commercial grade E-glass filaments with binder and sizing compatible with impregnating resins.
   3. Silica Sand: Sand shall be minimum 98 percent silica with a maximum moisture content of 0.2 percent.
   4. Additives: Resin additives such as curing agents, pigment, dyes, fillers, thixotropic agents, etc., when used, shall not detrimentally affect the performance of the product.
   5. End Squareness: Pipe ends shall be squared to the pipe axis with a maximum tolerance of 1/8 inches.

J. Customer Inspection:
   1. The Owner, Engineer, and/or Resident Project Representative shall be entitled to inspect pipes and witness the pipe manufacturing.
   2. Manufacturer's Notification to Customer: Should the Owner request to see specific pipes during any phase of the manufacturing process, the Manufacturer must provide the Owner with adequate advance notice of when and where the production of those pipes will take place.

© 2012 City of Franklin, Tennessee. All rights reserved.

K. References for Centrifugally Cast Fiberglass Reinforced Polymer Mortar Pipe Materials:
   1. ASTM D3262 – Standard Specifications for "Fiberglass" (Glass-Fiber-Reinforced Thermosetting-Resin) Sewer Pipe.
   2. ASTM D4161 – Standard Specifications for "Fiberglass" (Glass-Fiber-Reinforced Thermosetting-Resin) Pipe Joints Using Flexible Elastomeric Seals.
   3. ASTM D2412 – Standard Test Method for Determination of External Loading Characteristics of Plastic Pipe by Parallel-Plate Loading.
   4. ASTM D3681 – Standard Test Method for Chemical Resistance of "Fiberglass" (Glass-Fiber-Reinforced Thermosetting-Resin) Pipe in a Deflected Condition.
   5. ASTM D638- Test Method for Tensile Properties of Plastics.

L. Gaskets shall be suitable for service conditions and loads indicated. Conflicts with products listed shall be brought to the Owner's attention before proceeding with ordering materials.

M. Joint lubricant shall be suitable for service conditions and pipe material and as recommended by the pipe manufacturer.

1.6 PRODUCT DELIVERY, STORAGE, AND HANDLING

A. Delivery: Deliver piping with factory-applied end caps. Maintain end caps through shipping, storage, and handling to prevent pipe-end damage and to prevent entrance of dirt, debris, and moisture.

B. Storage:
   1. Protect stored piping from moisture and dirt. Elevate above grade. Do not exceed structural capacity of floor when storing inside.
   2. Store plastic piping protected from direct sunlight.
   3. Support to prevent sagging and bending.

C. Handling:
   1. Protect flanges, fittings, and specialties from moisture and dirt.
   2. Use textile slings, other suitable materials or a forklift for handling of Centrifugally Cast Fiberglass Reinforced Polymer Mortar Pipe. Use of chains or cable is not recommended.

1.7 GENERAL REQUIREMENTS

A. Pipe material for sewer lines shall be PVC or ductile iron unless otherwise shown on the drawings.

B. Shop drawings and manufacturer certification are required for all products specified in this section.

C. Refer to other sections for items affecting gravity sewers. Coordinate this work with that specified by other sections for timely execution.

D. Each type of gravity pipe and fittings (PVC, DIP, etc.) supplied under this section shall be provided by the same manufacturer.

E. The minimum pipe size for gravity wastewater mains is 8 inches.

© 2012 City of Franklin, Tennessee. All rights reserved.

F. Sewers shall be laid with uniform slope between manholes.

G. The following minimum slopes shall be provided based on diameter of the pipe:

Diameter (inches)	Minimum slope (per 100 feet)
8	0.4
10	0.28
12	0.22
15	0.15
16	0.14
18	0.12
21	0.10
24	0.08
27	0.067
30	0.058
36	0.046
42	0.037
48	0.031

These slopes are based on using Manning's formula with an "n" value of 0.013 and providing a mean velocity of not less than 2 feet per second at the estimated peak flow.

Slopes for pipe sizes larger than 48 inches shall be determined on a case-by-case basis and approved by the COF.

H. A minimum slope of 0.2 foot drop across the bottom of the manhole must be provided to maintain cleaning and the hydraulic gradient; otherwise WMD approval is required.

I. Sewers on 18 percent slope or greater shall be anchored securely with concrete anchors with the following minimum spacing:

1. Not over 36 feet center to center on grades 18 percent and up to 25 percent
2. Not over 24 feet center to center on grades 25 percent and up to 35 percent
3. Not over 16 feet center to center on grades 35 percent and over

J. Where sanitary sewers are installed in new fill, a compaction letter sealed by a Geotechnical Engineer registered in the State of Tennessee shall be submitted to the Owner prior to accepting said utilities. An acceptable compaction letter shall state that field density testing indicates the fill has been compacted to at least 95% of the maximum dry density according to the Standard Proctor. If a compaction letter is not available, special protection such as replacement with ductile iron pipe with joint restraint or encasement with flowable fill shall be utilized as approved by the WMD.

© 2012 City of Franklin, Tennessee. All rights reserved.

K. Wastewater lines located near bodies of water shall not "float". Calculations shall be submitted verifying if the wastewater line floats. If the wastewater line may float, it shall be anchored.

L. Generally the following locations should be utilized for location of new wastewater lines unless field conditions such as other utilities, etc., make it impractical to do so:

1. New Subdivisions - New mains to be in the center of the roadway where practical unless otherwise approved by the WMD and shall not be located under sidewalks
2. Along older roads in existing subdivisions that have open ditches, the main wastewater line shall be located in easements unless otherwise approved by the WMD.

M. No wastewater main shall be located in a detention basin, water quality pond or other drainage structure. Sanitary sewer pipe and manholes shall not be located in or underneath the dam or dike of the detention basin nor located anywhere within ten feet horizontally of the projected maximum high water line of the water in the detention basin.

N. For wastewater mains 15 inches or smaller and with less than or equal to 12 feet of cover, the material shall be PVC or otherwise as approved by the WMD.

O. For wastewater mains 15 inches or smaller and with greater than 12 feet of cover, the material shall be DIP or otherwise as approved by the WMD.

P. For wastewater mains 16 inches to 24 inches, the material shall be DIP or otherwise as approved by the WMD.

Q. Regardless of the depth, for wastewater mains that are larger than 24 inches in diameter, the material shall be FRP or otherwise as approved by the WMD.

R. Due to maintenance considerations, no lines shall be deeper than 15 feet without WMD approval.

S. Jointing two different material types of pipe between manholes will not be permitted.

T. Where underground electrical service exists or it is proposed, the wastewater line and service laterals must be located a minimum of 18 inches vertical separation below the electric service.

U. Where gas lines exist or are proposed there must be at least 10' horizontal separation between the wastewater line and gas line and a minimum 12" vertical separation between the two lines.

V. All changes in pipe diameters shall be at manholes.

1.8 SERVICES

A. The minimum pipe diameter for a wastewater service is 6 inches.

B. Service lines shall generally be located 10' from the water service line and on the downstream side and/or out of the way of driveways, landscaping, headwalls, etc.

© 2012 City of Franklin, Tennessee. All rights reserved.

C. Cleanouts shall be located in a concrete box as approved by the WMD per the details.

D. The minimum slope for a wastewater lateral is two (2) percent.

E. The minimum cover for a wastewater lateral is eighteen (18) inches.

PART 2 - GENERAL

2.1 DUCTILE IRON PIPE

Ductile iron pipe for sanitary sewer use shall have Protecto 401 ceramic epoxy lining.

A. Ductile iron pipe shall conform to the requirements of ANSI 21.151/AWWA C151 latest revision for ductile iron pipe centrifugally cast in metal or sand-lined molds. It shall be made and tested in accordance with ASTM A536, latest revision. The pipe shall be able to withstand a hydrostatic pressure of 500 psi.

B. The design thickness shall be that specified by ANSI A21.50/AWWA C150 latest revision except that all pipe with a diameter of 12 inches or less shall be Pressure Class 350 and all pipe with a diameter 14 inches or greater shall be Pressure Class 250 unless determined otherwise by the Owner or Engineer.

C. Coatings and Lining: Pipe shall be lined with Protecto 401ceramic epoxy lining, an amine cured novolac epoxy containing at least 20% by volume of ceramic quartz pigment. The outside coating shall be an asphaltic coating approximately 1 mil thick in accordance with ANSI A21.51/AWWA C151.

D. The bell of each pipe shall have a tapered annular opening and a cast or machined retaining groove for the gasket. The gasket shall have a flared design so that maximum deflection will be provided. The plain spigot end of the pipe shall be beveled in order to simplify its entry into and centering within the bell and compression of the gasket.

E. Gaskets:
   1. Gaskets shall be Styrene Butadiene Copolymer (SBR) or Ethylene Propylene Diene Monomer (EPDM) in accordance with ANSI A21.11/AWWA C111, latest revision made in the form of a solid ring to exact dimensions.
      a. Push-on Joint Gaskets: The design of the gasket groove in the bell of the pipe and the design, hardness, and other properties of the gasket itself shall be such that the joint is liquid tight for all pressures from a vacuum to a maximum rating of 350 psi of internal liquid pressures. Gaskets for pipe with an operating pressure greater than 160 psi shall be restrained joint gaskets.
         1) Manufacturer / Model:
            a) American Ductile Iron Pipe “Fastite,”
            b) U.S. Pipe “Tyton,” or
            c) Approved equal.
      b. Push-on Restrained Joint Gaskets: Restrained pipe and fittings are as shown on the Drawings. Retainer glands and similar devices will not be allowed unless otherwise noted or shown on the Drawings or approved by the Owner. Push-on joint restraint shall be incorporated in the design of the pipe bell and gasket. The restraint shall be provided by the wedging action developed between pairs of

© 2012 City of Franklin, Tennessee. All rights reserved.

hardened high-strength, stainless steel elements spaced around the gasket. The push-on restrained joint shall be rated for 250 psi working pressure.

1) Manufacturer / Model:
   a) American Ductile Iron Pipe "Fast-Grip" (for pipe sizes 24-inch and less),
   b) U.S. Pipe "Field Lok" Gaskets (for pipe sizes 24-inch and less),
   c) American Ductile Iron Pipe "Flex-Ring" (for pipe sizes 30 and 36 inch),
   d) American Ductile Iron Pipe "Lok-Ring" (for pipe sizes greater than 46 inches),
   e) U.S. Pipe "TR Flex" (for pipe sizes 24-inch and larger), or
   f) Approved equal.

2. Lubricant: Lubricant shall be furnished with each order to provide for the proper installation of the pipe supplied with said order. This lubricant shall be nontoxic, impart no taste or smell to the water, and have no harmful effect on the rubber gasket. It shall have a consistency that will allow it to be easily applied to the pipe in either hot or cold weather and that will enable it to adhere to either wet or dry pipe.

F. Welded-on Outlets:

1. Welded-on outlets shall be limited to branch outlets having a nominal diameter less than 70 percent of the nominal diameter of the main line pipe or 30-inch whichever is smaller as shown in the following table.

Main Line Nominal Diameter	**Branch Outlet Nominal Diameter**
10 inch	6 inch
12 inch	8 inch
14 inch	8 inch
16 inch	10 inch
18 inch	12 inch
20 inch	14 inch
24 inch	16 inch
30 inch	20 inch
36 inch	24 inch

2. Parent pipe and branch outlet candidate pipe shall be centrifugally cast ductile iron designed in accordance with ANSI A21.50/AWWA C150 and manufactured in accordance with ANSI A21.51/AWWA C151. Minimum classes shall be: for sizes 4-inch through 54-inch, Special thickness Class 53; for sizes 60-inch through 64-inch, Pressure Class 350.
3. Welded-on outlets may be provided as a radial tee outlet, tangential outlet, or lateral outlet fabricated at a specific angle to the main line pipe in 1 degree increments between 45 degrees and 90 degrees from the axis of the main line pipe as shown on the Drawings.
4. All welded-on outlets shall be rated for a working pressure of 250 psi and must have a minimum safety factor of 2.0 based on proof of design hydrostatic test results.
5. The joints on welded-on branch shall meet, where applicable, the requirements of ANSI A21.11/AWWA C111 and/or ANSI A21.15/AWWA C115. The joint materials (glands, gaskets, and studs) shall be furnished where applicable.
6. Weldment for welded-on outlets shall be based on the method described in Section VIII of the ASME Unfired Pressure Vessel Code. Reinforcing welds shall be placed using

© 2012 City of Franklin, Tennessee. All rights reserved.

Ni-Rod 55 cored wire or Ni-Rod 55 electrodes manufactured by INCO Alloys (or an electrode with equivalent performance properties). Carbon Steel electrodes are not acceptable.

7. Prior to the application of any coating or lining in the outlet area all weldments for branch outlets to be supplied on this project shall be subjected to an air pressure test of at least 15 psi. Air leakage is not acceptable. Any leakage shall be detected by applying an appropriate soapy water solution to the entire exterior surface of the weldment and adjoining pipe edges or by immersing the entire area in a vessel of water and visually inspecting the weld surface for the presence of air bubbles. Any weldment that shows signs of visible leakage shall be repaired and retested in accordance with the manufacturer's written procedures.
8. Welded-on outlets shall be fabricated by the pipe manufacturer at the same facility where the pipe is produced. The pipe manufacturer shall have a minimum of 5 years of experience in the fabrication and testing of outlets of similar size and configuration.
9. The manufacturer shall have a fully documented welding quality assurance system and maintain resident quality assurance records based on ANSI/AWS D11.2, the Guide for Welding Iron Castings. The manufacturer shall maintain appropriate welding procedure specifications (WPS), procedure qualification (PQR), and welder performance qualification test (WPQR) records as well as appropriate air test logs documenting air leakage tests.

G. Manufacturer:
1. American Cast Iron Pipe Company,
2. Griffin Pipe Products,
3. McWane,
4. U.S. Pipe, or
5. Approved equal.

2.2 DUCTILE IRON FITTINGS

Ductile iron fittings for sanitary sewer use shall have Protecto 401 ceramic epoxy lining.

A. Standard and special fittings shall be Pressure Class 350 ductile iron. Use standard mechanical joint fittings or anchoring tees at hydrant locations. All fittings shall conform to the specifications of ANSI A21.10/AWWA C110 (Full Body) or ANSI A21.53/AWWA C153 (Compact), latest revisions.

B. All buried fittings shall be push-on or mechanical joint. Non-buried fittings shall be flanged unless otherwise shown on Drawings or directed by the Owner. Where flanged pipe is shown, no substitution of a Uni-Flange type joint will be used without prior approval of the Owner. Where push-on joint fittings are used, the fittings must be rodded to an anchor (i.e. dead-man, valve, etc.), have a mechanical joint fitting restraining device, or push-on restrained joint gasket. Use anchor tees or joint restraint device at hydrant locations.

C. Coatings and Lining: Fittings shall be lined with a Protecto 401 ceramic epoxy lining. This is an amine cured novolac epoxy containing at least 20% by volume of ceramic quartz pigment. The outside coating shall be an asphaltic coating approximately 1 mil thick in accordance with ANSI A21.51/AWWA C151.

© 2012 City of Franklin, Tennessee. All rights reserved.

D. Manufacturer:
   1. Tyler/Union
   2. American Cast Iron Pipe Company
   3. U.S. Pipe and Foundry

2.3 POLYVINYL CHLORIDE PLASTIC (PVC) PIPE

A. PVC plastic pipe shall conform to the latest edition of ASTM Specification – D3034 for 4" through 15" diameter pipe, ASTM Specification F679 for 18" through 48" diameter pipe, AWWA C900, and/or AWWA C905, as appropriate; Standard Dimension Ratios (SDR); Maximum Length – 20 feet. PVC Pipe, 3 inches and smaller shall conform to the latest edition of ASTM D 1785 Schedule 80 with solvent weld joints.

B. Joints shall be integral bell and spigot type joints conforming to ASTM D-3139. Elastomeric gasket shall conform to the requirements of ASTM F-477. Gaskets shall be part of a complete pipe section and purchased as such. Lubricant shall be as recommended by the pipe or fitting manufacturer and shall not adversely affect the potable qualities of the water to be transported.

C. PVC pipe shall have the following pipe stiffness ratings unless specified otherwise:

SDR	Pipe Stiffness (psi)
35	46
26	115
23.5	135

D. Manufacturer:
   1. Hawk Plastics Corporation,
   2. Vulcan Plastic Corporation,
   3. North American Pipe Corporation, or
   4. Approved equal

2.4 POLYVINYL CHLORIDE PLASTIC (PVC) FITTINGS

A. PVC fittings shall be constructed of the same plastic material and have the same minimum pressure rating as the pipe being connected. The fittings shall be the molded type or machined from extruded stock.

B. PVC fittings, adaptors, or appurtenances shall be furnished, as required, to connect the plastic pipe to cast or ductile iron valves, fittings, and pipe.

C. PVC fittings 3-inch and smaller shall be Schedule 80 socket type in accordance with ASTM D 2467. All socket type connections shall be made with PVC solvent cement complying with ASTM D 2564. PVC solvent cement shall be furnished from the same supplier as the PVC pipe. Socket-threaded adapters shall be provided for connection to threaded appurtenances where required.

2.5 HIGH DENSITY POLYETHYLENE (HDPE) PIPE

A. The sewer line replacement pipe shall be manufactured from high density polyethylene pipe (HDPE) compound which conforms to ASTM D1248 and meets the requirements for Type III, Class B, Category 5, grade P34 and has a PPI rating of PE3408. The pipe produced from this

© 2012 City of Franklin, Tennessee. All rights reserved.

resin shall have a minimum cell classification of 345434D or E as per ASTM D3350. Pipe shall be light in color to produce good quality televised inspection.

B. The HDPE pipe shall be ductile iron pipe size (DIPS) as per ASTM F714.

C. The outside diameter of the pipe shall be such that a standard dimension ratio (DR) of 17 results in the specified internal diameter of the proposed sewer.

D. The minimum length shall be that deemed necessary by the Contractor to effectively span the distance from the inlet to the outlet of the respective manholes with allowances for thermal expansion and contraction and for any creep that may occur as a result of installation. The Contractor shall verify the lengths in the field before installing the pipe.

E. Marking on polyethylene pipe shall include the following:
1. ASTM F714.
2. Cell Classification 345434 D or E.
3. Nominal size (for example, 10 inches), followed by DIPS.
4. DR 17.
5. Name of manufacturer.
6. Production code from which location and date of manufacturer can be identified.
7. Pipe test category.

F. Tests for compliance shall be made according to the applicable ASTM specification. A certificate with this specification shall be provided by the manufacturer for all material furnished. The Owner reserves the right to witness inspection and test of the materials.

G. The pipe shall conform to the minimum structural standards for HDPE (Type III Resins) meeting ASTM D3350, as listed below.

	U.S. Standard	**Results**
Flexural Stress (Yield)	ASTM D-638	3,300 PSI
Flexural Stress (Break)	ASTM D-638	4,500 PSI
Flexural Modulus of Elasticity	ASTM D-790	145,000 PSI

H. The pipe shall have a green stripe to indicate wastewater use.

2.6 HIGH DENSITY POLYETHYLENE (HDPE) FITTINGS

A. Butt Fusion Fittings: Shall be PE3408 HDPE, Cell Classification of 345464C as determined by ASTM D3350-02, and approved for AWWA use. Butt Fusion Fittings shall have a manufacturing standard of ASTM D3261. Molded and fabricated fittings shall have a pressure rating equal to the pipe unless otherwise specified in the drawings. Fabricated fittings are to be manufactured using Data Loggers. Temperature, fusion pressure, and a graphic representation of the fusion cycle shall be part of the quality control records. All fittings shall be suitable for use as pressure conduits, and per AWWA C906, have nominal burst values of three and one-half times the Working Pressure Rating (WPR) of the fitting.

B. Electrofusion Fittings: Shall be PE3408 HDPE, Cell Classification of 345464C as determined by ASTM 3350-02. Electrofusion fittings shall have a manufacturing standard of ASTM F1055. Fittings shall have a pressure rating equal to the pipe unless otherwise specified on the plans. All electrofusion fittings shall be suitable for use as pressure conduits, and per AWWA

© 2012 City of Franklin, Tennessee. All rights reserved.

C906, have nominal burst values of three and one-half times the Working Pressure Rating (WPR) of the fitting. All electrofusion couplings and fittings must use a 3-pin fusion system.

C. Flanged and Mechanical Joint Adapters: Shall be PE 3408 HDPE, Cell Classification of 345464C as determined by ASTM D3350-02. Flanged and mechanical joint adapters shall have a manufacturing standard of ASTM D3261. Fittings shall have a pressure rating equal to the pipe.

2.7 CENTRIFUGALLY CAST FIBERGLASS REINFORCED POLYMER MORTAR PIPE

A. Manufacture pipe by the centrifugal casing process to result in a dense, non-porous, corrosion-resistant, consistent composite structure.
   1. The interior surface of the pipe exposed to sewer flow shall be manufactured utilizing a resin with a 50 percent elongation (minimum) when tested in accordance with ASTM D638. The interior surface shall provide crack resistance and abrasion resistance. Certification from the resin supplier shall be included in the submittals.
   2. The exterior surface of the pipe shall be comprised of a sand and resin layer. The layer should provide for UV protection to the pipe exterior.

B. Unless otherwise specified, the pipe shall be field connected with fiberglass sleeve couplings that utilize elastomeric sealing gaskets made of EPDM rubber compound as the sole means to maintain joint watertightness. The joints must meet the performance requirements of ASTM D4161. Joints at tie-ins, when needed, may utilize fiberglass, gasket-sealed closure couplings. Joints shall be rated for the working, test, and surge pressures including deflected conditions. Joint lubricant shall be suitable for service conditions and as recommended by the manufacturer.

C. Flanges, elbows, reducers, tees, wyes, laterals and other fittings shall be capable of withstanding all operating conditions when installed. They may be contact molded or manufactured from mitered sections of pipe joined by glass-fiber-reinforced overlays. Properly protected standard ductile iron, fusion-bonded epoxy coated steel and stainless steel fittings may also be used.
   1. Change in direction of gravity sewer lines larger than 48 inches shall be accomplished using fittings with manhole risers.

D. Dimensions:
   1. The actual outside diameter (18” to 48”) of the pipes shall be in accordance with ASTM D3262. For other diameters, OD’s shall be per manufacturer’s literature.
   2. Pipe shall be supplied in nominal lengths of 20 feet. Actual laying length shall be nominal plus 1 inch, minus 4 inches. At least 90 percent of the total footage of each size and class of pipe, excluding special order lengths, shall be furnished in nominal length sections.
   3. Wall Thickness: The minimum wall thickness shall be as follows:

Nominal Pipe Diameter (inches)	Minimum Wall Thickness (inches)	
	Minimum Pipe Stiffness 46 (psi)	Minimum Pipe Stiffness 72 (psi)
18	0.39	0.44
20	0.43	0.49

© 2012 City of Franklin, Tennessee. All rights reserved.

Nominal Pipe Diameter (inches)	Minimum Wall Thickness (inches)	
	Minimum Pipe Stiffness 46 (psi)	Minimum Pipe Stiffness 72 (psi)
24	0.50	0.57
27	0.54	0.62
30	0.61	0.70
33	0.64	0.74
36	0.72	0.83
42	0.83	0.95
45	0.89	1.02
48	0.94	1.08
51	1.00	1.15
54	1.05	1.21
57	1.10	1.27
60	1.15	1.33
63	1.21	1.39
66	1.27	1.46
69	1.32	1.53
72	1.38	1.59
78	1.48	1.71
84	1.58	1.82
90	1.71	1.97
96	1.80	2.08
104	1.95	2.25
110	2.06	2.38

E. Testing:
1. Pipes shall be manufactured and tested in accordance with ASTM D3262.
2. Coupling Joints shall meet the requirements of ASTM D4161.

F. Minimum pipe stiffness when tested in accordance with ASTM D2412 shall be 46 psi.

G. The extrapolated 50-year strain corrosion value shall not be less than 0.9 percent as determined in accordance with ASTM D3681 and D3262.

H. Acceptable Manufacturers:
1. HOBAS Pipe USA, Inc.,
2. Amitech USA, or
3. Approved equal.

2.8 MECHANICAL JOINT FITTING RESTRAINT DEVICES

A. Ductile Iron Pipe Restraint Devices:

© 2012 City of Franklin, Tennessee. All rights reserved.

1. Restraint devices for nominal pipe sizes 3 inch through 48 inch shall consist of multiple gripping wedges incorporated into a follower gland meeting the applicable requirements of ANSI/AWWA C110/A21.10. Restraint device shall have torque limiting twist-off nuts.
2. Restraint devices shall have a working pressure rating of 350 psi for 3 through16 inch and 250 psi for 18 through 48 inch. Ratings are for water pressure and must include a minimum safety factor of 2 to 1 in all sizes.
3. Gland body, wedges and wedge actuating components shall be cast from grade 65-45-12 ductile iron material in accordance with ASTM A536.
4. Manufacturer / Model:
   a. EBAA Iron Inc. Megalug Series 1100, or
   b. Approved equal.

B. Polyvinyl Chloride Pipe Restraint Devices:
1. Restraint devices shall consist of multiple gripping wedges incorporated into a follower gland meeting the applicable requirements of ANSI/AWWA C111/A21.11. Restraint device shall have torque limiting twist-off nuts.
2. The devices shall have a working pressure rating equal to that of the pipe on which it is used. Ratings are for water pressure and must include a minimum safety factor of 2 to 1 in all sizes.
3. Gland body, wedges and wedge actuating components shall be cast from grade 65-45-12 ductile iron material in accordance with ASTM A536.
4. Manufacturer / Model:
   a. EBAA Iron, Inc. Megalug Series 2000PV, or
   b. Approved equal.

C. Plain End to Plain End Pipe Restraint Device:
1. Joint restraint to prevent axial separation shall be incorporated into the design of the sleeve or coupling used to connect two plain ends of same or dissimilar materials, such as ductile iron pipe, steel pipe, PVC pipe (C900, C905, or ASTM D2241) and or high density polyethylene (HDPE) pipe.
2. To prevent movement causing fitting to slide or rotate, internal pipe wall stiffeners must be used. The stiffeners must be sized to encompass the entire bearing length of the restraint devices.
3. Restraint devices shall consist of multiple gripping wedges incorporated into a follower gland. Restraint device shall have torque limiting twist-off nuts.
4. The coupling sleeve shall be coated internally with a minimum of 15mils of fusion bonded epoxy conforming to the applicable requirements of ANSI/AWWA C213.
5. Ductile Iron components shall meet or exceed the requirements of ASTM A536.
6. The restrained joining system shall meet the applicable requirements of AWWA C219, ANSI/AWWA C111/A21.11, and ASTM D2000.
7. Manufacturer / Model:
   a. EBAA Iron, Inc. Series 3800, or
   b. Approved equal.

2.9 FLANGED COUPLING ADAPTERS

A. Flanged coupling adapters shall be used to connect plain end pipe to flanged fittings, meters, valves, or equipment as shown on the Drawings shall be rated for 200 psi working pressure unless indicated otherwise.

© 2012 City of Franklin, Tennessee. All rights reserved.

B. Materials of Construction:

Body	Steel	ASTM A53
Flange		
3" thru 5" Pipe		ANSI 150 lb flat face
6" Pipe and above		AWWA C207 Class D, ANSI 150 lb drilling
Follower		
3" thru 12" Pipe	Ductile Iron	ASTM A536
14" Pipe and above	Heavy Rolled Steel	AISI C1018
Gasket		Grade 30
Bolts and Nuts	304 Stainless Steel	
Interior Coating	Fusion Bonded Epoxy	
Exterior Coating	2 Coats of Rust Inhibiting Synthetic Resin or Asphaltum Enamel	

C. Manufacturer / Model
1. Smith-Blair Model 913 Steel Restrained Flanged Coupling Adapter with Optional Anchor Studs, or
2. Approved equal.

2.10 FLEXIBLE EXPANSION JOINT

A. Flexible expansion joints shall be installed in the locations indicated on the Drawings. Flexible expansion joints shall be cast from grade 65-45-12 ductile iron conforming to the material requirements of ASTM A536 and ANSI/AWWA C153/A21.53.

B. Each flexible expansion joint shall be pressure tested at the factory against its own restraint to a minimum of 350 psi (250 psi for 30" diameter and larger.) A minimum 2:1 safety factor shall apply.

C. Each flexible expansion joint shall consist of an expansion joint designed and cast as an integral part of a ball and socket type flexible joint, having a minimum per ball deflection of: 20 degrees, 3 inch – 12 inch; 15 degrees, 14 inch – 36 inch; 12 degrees, 48 inch and 4-inches minimum expansion. Additional expansion sleeves shall be available and easily added or removed at the factory or in the field. Both standardized mechanical joint and flange end connections shall be available.

D. All internal surfaces (wetted parts) shall be lined with a minimum of 15 mils of fusion bonded epoxy conforming to the applicable requirements of ANSI/AWWA C213. Sealing gaskets shall be constructed of EPDM. The coating and gaskets shall meet ANSI/NSF-61.

© 2012 City of Franklin, Tennessee. All rights reserved.

E. All external surfaces shall be coated with a catalyzed coal tar epoxy conforming to the material requirements of AWWA C210. Appropriately sized polyethylene sleeves, meeting ANSI/AWWA C105/A21.5, shall be included for direct buried applications.

F. Manufacturer / Model:
   1. EBAA Iron, Inc. FLEX-TEND, or
   2. Approved equal.

2.11 COMPRESSION COUPLINGS

A. When dissimilar pipe materials like PVC and concrete pipe are joined, use compression couplings that are resistant to the corrosive action of soils and sewage and that will provide a permanent watertight joint. The compression couplings shall be of natural or synthetic rubber or rubber-like material and shall comply with the requirements and test methods specified in Table 2 of ASTM C425. The coupling shall meet the leak requirements specified in ASTM C425, and the bands for attaching the couplings to the dissimilar pipes shall be of stainless steel meeting ASTM A167 or A240. Each coupling shall bear the manufacturer's identifying mark and an indication of its size. Compression couplings will not be allowed in the new sewer laterals (main line) without prior permission from the Owner.

2.12 LINE MARKERS

A. Markers shall be single piece design, constructed of durable, UV resistant, composite material, and have a pointed end for ease of installation. The marker shall have a constant flat "T" cross-sectional design and be 3.75 inch in width and of such length to provide a minimum height above the ground surface of 44 inches and a minimum embedment depth of 18 inches. The marker shall resist displacement from wind and vehicle impact forces. The marker shall be free of burns, discoloration, cracks, bulges, or other objectionable marks. A line shall be stamped horizontally across the front of the marker to indicate proper burial depth.

B. The marker shall be pigmented throughout the entire cross-section so as to produce a uniform color which is an integral part of the material. The marker shall be colored green.

C. Line markers shall be labeled with the lettering "CAUTION SEWER LINE" with the Owner's name and telephone number written below the lettering.

D. Manufacturer / Model:
   1. Carsonite International, Early Branch, SC Model CUM 375 or
   2. Approved equal.

2.13 UTILITY WARNING TAPE

A. Detectable underground utility warning tape, which can be located from the surface by a pipe detector, shall have of a minimum thickness of 0.35 mils solid aluminum foil encased in a protective inert plastic jacket that is impervious to all known alkalis, acid, chemical reagents and solvents found in the soil. The tape shall have a minimum overall thickness of 5.0 mils and a minimum width of 3 inch (non-metallic piping) with a minimum unit weight of 2-1/2 pounds/ 1 inch x 1,000 foot. The tape shall be color coded green in accordance with APWA National Color Code and permanently imprinted "Caution Buried Sewer Line Below".

© 2012 City of Franklin, Tennessee. All rights reserved.

B. Manufacturer / Model:
   1. Allen Systems, "Detect Tape",
   2. Empire Level Mfg. Corp., "Magnatee", or
   3. Approved equal.

PART 3 - EXECUTION

3.1 EARTHWORK

A. Refer to Division 31 Section "Earthwork" for excavating, trenching, and backfilling.

3.2 EXCAVATION FOR GRAVITY SEWERS

A. Unclassified excavation for pipelines shall consist of the excavation necessary for the construction of sewer lines and their appurtenances (including manholes, collars, concrete saddles, and pipe protection) that are called for by the drawings. It shall include clearing and grubbing where necessary, backfilling and tamping pipe trenches and around structures, and disposing of waste materials, all of which shall conform to the applicable provisions set forth elsewhere in these specifications.

B. The Contractor may, if he chooses, use a motor powered trenching machine. If he does, however, he shall be fully responsible for the preservation or repair of existing utility service connections.

C. Unless the construction of lines by tunneling or boring is called for by the drawings or specifically authorized by the Owner, make excavation for pipelines in open cut and true to the lines and grades shown on the drawings or established by the Owner on the ground. Cut the banks of trenches between vertical parallel planes equidistant from the pipe centerline. The horizontal distance between the vertical planes (or, if sheeting is used, between the inside faces of that sheeting) shall vary with the size of the pipe to be installed, but shall not be more than the distance determined by the following formula: 4/3d + 15 inches, where "d" represents the internal diameter of the pipe in inches. When approved in writing by the Owner, the banks of trenches from the ground surface down to a depth not closer than 1 foot above the top of the pipe may be excavated to non-vertical and nonparallel planes, provided the excavation below that depth is made with vertical and parallel sides equidistant from the pipe centerline in accordance with the formula given above. Any cut made in excess of the formula 4/3d + 15 inches shall be at the expense of the Contractor and may be cause for the Owner to require that stronger pipe and/or a higher class of bedding be used at no cost to the Owner.

D. For all pipes provide a minimum 6 inches of No. 67 (TDOT) crushed stone for bedding.

E. Do not excavate pipe trenches more than 400 foot ahead of the pipe laying, and not more than four hundred (400) feet of open ditch shall be left behind the pipe laying, and perform all work so as to cause the least possible inconvenience to the public. Construct temporary bridges or crossing when and where the Owner deems necessary to maintain vehicular or pedestrian traffic.

F. In all cases where materials are deposited along open trenches, place them so that in the event of rain no damage will result to the work and/or to adjacent property.

© 2012 City of Franklin, Tennessee. All rights reserved.

G. Refer to the Section regarding excavation for sheeting, shoring and bracing requirements.

H. Prior to excavating pipe trench for sewer mains and services outside of public R.O.W. an onsite meeting between Owner, Engineer, and Contractor is required to discuss proper methods of installation to preserve existing mature tree roots. The proposed alignment centerline and trench edge shall be marked prior to onsite meeting. An 8" layer of bark, wood chips, or arborist approved mat is required to limit soil compaction within the drip line. Cleanly cut roots prior to trench excavation. Trench spoil will not be allowed to be placed within the drip line and left for more than three days. The City's arborist shall be consulted prior to and during construction activities.

3.3 PIPE LAYING

A. Two weeks prior to the commencement of trench excavation, the Contractor shall prepare and submit to the Owner for review four (4) copies of detailed Cut Sheets showing the beginning and ending manholes; the distance between manholes; the grade, size and type of line; the depth of cut; etc. All expense for the preparation of Cut Sheets on minimum 50 foot centers including abrupt grade changes such as ditches shall be borne by the Contractor and be included in the unit price bid per foot of pipe.

1. Cut Sheets must be reviewed and approved by the Owner in writing before trenching operations may be permitted. It shall be the Contractor's responsibility to prepare Cut Sheets in advance of his anticipated trenching schedule.

B. Lay no pipe except in the presence of the Resident Project Representative.

C. Before placing sewer pipe in position in the trench, carefully prepare the bottom and sides of the trench, and install any necessary bracing and sheeting as required in this Specification.

D. Wherever necessary to provide satisfactory bearing surface, place concrete cradles as shown on the drawings or as directed by the Owner. Cradles shall be of concrete and conform to the dimensions shown on the drawings. Concrete placed outside the dimensions shown shall be at the Contractor's expense.

E. Tightly stretch a mason's line or wire above ground level, parallel to and directly above the axis of the pipe to be installed, supporting this line at intervals of no more than 50 foot for sewers being laid on a grade of 2 percent or more and of no more than 25 foot for grades of less than 2 percent. Determine the exact line and grade for each section of pipe by measuring down from this line to the invert of the pipe in place, and accurately place each pipe to the exact line and grade called for on the drawings. Furnish all labor and materials necessary for erecting batter-boards.

F. Lasers may be used after the type and procedures are approved by the Owner. When lasers are used, set reference points for both line and grade at each manhole. Where grades are 0.6 percent or less, check the elevation of the beam each 100 foot with an offset point or engineer's level.

G. Do not allow water to run or stand in the trench while pipe laying is in progress or before the trench has been backfilled. Do not at any time open up more trench than the available pumping facilities are able to dewater.

© 2012 City of Franklin, Tennessee. All rights reserved.

H. Correct trench bottoms found to be unsuitable for foundations after pipe laying operations have started, bringing them to exact line and grade with crushed stone as necessary.

I. Carefully inspect each piece of pipe and special fitting before it is placed, and lay no defective pipe in the trench. Pipe laying shall proceed upgrade, starting at the lower end of the grade and with the bells upgrade. When pipe laying is not in progress, keep the ends of the pipe tightly closed with an approved temporary plug.

J. Bell holes shall be large enough to allow ample room for the pipe joints to be properly made. Cut out bell holes no more than two joints ahead of pipe laying. Carefully grade bottom of the trench between bell holes so each pipe barrel rests on a solid foundation for its entire length. Lay each pipe joint so as to form a close concentric joint with adjoining pipe and to avoid sudden offsets or inequalities in the flow line.

K. Before constructing or placing any joints, demonstrate to the Resident Project Representative, by completing at least one sample joint, that the methods to be used conform to the specifications and will provide a watertight joint and further that the workmen to be involved in this phase of work are thoroughly familiar and experienced with the type of joint proposed.

L. No other type of joint may be used unless authorized in writing by the Owner.

M. Install tee branches in sewer lines to serve properly each lot facing or abutting on the street or alley in which sewer is being laid at such other locations as may be designated by the Owner. If tee branches are not to be used immediately, close them with approved stoppers that are held in place to prevent infiltration and withstand all test requirements.

N. For all tees that are plugged and laid in rock, blast a minimum of six linear feet of ditch line in the direction and to the approximate grade of the future lateral as directed by the Owner, but do not excavate the material. This shall be done at no extra cost to the Owner. Furnish the Owner with a record of the exact location of each tee installed.

O. If the work consists of constructing a new sewer to replace an existing one, connect existing service lines to the new line.

P. New service laterals shall conform to the standard drawings.

Q. Jointing:
   1. Clean ends of pipe, bell interior, and coupling components before jointing.
   2. Apply joint lubricant to pipe ends, bell interior, and elastomeric seals of coupling. Use only lubricants approved by the pipe manufacturer.
   3. Use suitable equipment and end protection to push or pull the pipes and/or couplings together. Do not exceed forces recommended by the pipe and coupling manufacturers.
   4. Join pipes in straight alignment then, if allowed, defect the pipe to the required angle. Deflection shall not exceed 3 degrees unless otherwise noted or the manufacturers recommended deflection.

R. As the work progresses, thoroughly clean the interior of the pipe in place. After each line of pipe has been laid, carefully inspect it, and remove all earth, trash, rags, and other foreign matter from its interior.

© 2012 City of Franklin, Tennessee. All rights reserved.

S. After the joints have been completed, they shall be inspected, tested, and accepted by the Resident Project Representative before being covered. The pipe shall meet the test requirements for water-tightness; immediately repair any leak or defect discovered at any time after completion of the work. Any pipe that has been disturbed after joints were formed shall be taken up, the joints cleaned and remade, and the pipe re-laid at the Contractor's expense. Carefully protect all pipes in place from damage until backfilling operations are completed.

T. Do not begin the backfilling of trenches until the pipe in place has been inspected and approved by the Resident Project Representative.

U. Line Separation:
1. Lay sewers at least 10 foot horizontally from any existing or proposed water main. If this is not practical, the sewer may be laid closer than 10 foot to a water main provided it is laid in a separate trench and the elevation of the top of the sewer is at least 18 inch below the bottom of the water main.
2. Where a sewer crosses under water mains, the top of the sewer shall be at least 18 inch below the bottom of the water main. If the elevation of the sewer cannot be varied to meet the above requirements, relocate the water main to provide this separation, or else reconstruct it with mechanical joint ductile iron pipe for a distance of 10 foot on each side of the sewer with a full joint of the water main centered over the sewer.
3. If it is impossible to obtain proper horizontal and vertical separation as stipulated above, construct both the water main and the sewer of mechanical joint ductile iron pipe, and pressure test each.
   a. Pipe shall be in accordance with paragraph 2.1 of this section with the exception that it be mechanical joint in lieu of bell and spigot.
   b. Sewer pipe shall be tested in place for a minimum of 2 hours without leakage prior to backfilling.
   c. The Owner must approve the construction method to be used whenever the minimum 10-feet horizontal separation and/or 18-inch vertical separation is not possible.

V. Make connections to all existing sewer lines as shown on the drawings or as directed by the Owner. Make connections either by removing a section of the sewer from the existing line and inserting a wye or tee branch of the proper size or by constructing a manhole, junction box, regulator chamber, or other structure as shown on the drawings.

W. Make connections to existing manholes or inlets by core drilling a hole in the wall of the existing structure, installing a Kor-N-Seal connector, inserting a length of sewer pipe into the hole. Shape or reshape the bottom of the manholes as necessary to fit the invert of the sewer pipe.

X. Joint dissimilar pipe by using suitable compression couplings. If compression couplings are not available, make jointing with a special fabricated coupling approved by the Owner.

Y. Provide concrete protection or concrete cap as shown on the drawings for pipe sewers that, when completed, have less than 2.5 feet of covering in non-traffic areas and 4 feet of cover in traffic areas. If such protection is not shown on the drawings, place it in accordance with the typical section shown.

© 2012 City of Franklin, Tennessee. All rights reserved.

Z. Carefully protect from damage all existing sewers, water lines, gas lines, sidewalks, curbs, gutters, pavements, electrical lines, and other utilities or structures in the vicinity of the work at all times. If it is necessary to repair, remove, and/or replace any such utility or structure in order to complete the work properly, do so in compliance with the provisions set forth in other section of these specifications or as required by the appropriate utility. Any such work shall be considered incidental to the construction of pipe sewers, and no additional payment will be allowed therefor.

1. Water service connections will be repaired or replaced by the Contractor at his expense as an incidental part of the work.
2. Service or house connections to existing sewers that are damaged or removed shall be repaired or replaced by the Contractor at his own expense as an incidental part of the work.

3.4 BACKFILLING

A. Begin backfilling after the line construction is completed, inspected, and approved by the Owner.

1. PVC, ADS, HOBAS, and HDPE:
   a. On each side of the line, from the bottom of barrel to one foot above the top of the pipe, the backfill material shall consist of No. 67 (TDOT) stone. Place this backfill simultaneously on either side of the pipe in even layers that before compaction are no more than six inches deep. Thoroughly and completely tamp each layer into place before placing additional layers.
2. Ductile Iron Pipe:
   a. On each side of the line, from the bottom of barrel to the top of the pipe, the backfill material shall consist of No. 67 (TDOT) stone.
   b. From the top of the pipe to one foot above the crown the backfill material shall be selected backfill consisting of either fine, loose earth like sandy soil or loam or of granular material that is free from clods, vegetable matter, debris, stone, and/or other objectionable materials and that has a size of no more than two inches. Place this backfill simultaneously on either side of the pipe in even layers that before compaction are no more than six inches deep.
   c. Thoroughly and completely tamp each layer into place before placing additional layers.

B. From one foot above the pipe upward, the backfill material may contain broken stones that make up approximately 3/4 of the backfill's total volume, However, if this type of backfill is used, there must be enough spalls and earth materials to fill all voids completely. The maximum dimension of individual stones in such backfill shall not exceed six inches, and the backfill material shall be placed and spread in even layers not more than 12 inches deep. At locations beneath or closely adjacent to pavement or at locations of improvements subject to damage by displacement, the backfill shall be entirely No. 67 (TDOT) stone. Tamp and thoroughly compact the backfill in layers that, before compaction, are six inches deep. Contractor shall demonstrate that backfill material is compacted to 95 percent of optimum density as defined by ASTM D698 (Standard Proctor). In other areas, the backfill for the upper portion of the trenches may be placed without tamping but shall be compacted to a density equivalent to that of adjacent earth material as determined by laboratory tests. Use special care to prevent the operation of backfilling equipment from causing any damage to the pipe.

© 2012 City of Franklin, Tennessee. All rights reserved.

C. For all underground piping installations, install continuous underground detectable warning tape during backfilling of trench.
   1. Installation of detectable tape shall be per manufacturer's recommendations and shall be as close to the grade as is practical for optimum protection and detectibility. Allow a minimum of 18 inches between the tape and the utility line. Allow a minimum of six inches between the tape and the ground surface.
   2. Installation of detectable tape shall be per manufacturer's recommendations. Allow a minimum of 18" between the tape and the utility line. Allow a minimum of 12 inches between the tape and the ground surface.
   3. Installation of non-detectable tape shall be per manufacturer's recommendations and shall be as close to the grade as is practical for optimum protection. Allow a minimum of 24 inches between the tape and the utility line. Allow a minimum of six inches between the tape and the ground surface.

D. If earth material for backfill is, in the opinion of the Resident Project Representative, too dry to allow thorough compaction, add enough water so that the backfill can be properly compacted. Do not place earth material that the Resident Project Representative considers too wet or otherwise unsuitable.

E. Wherever excavation has been made within easements across private property, the top one foot of backfill material shall consist of fine loose earth free from large clods, vegetative matter, debris, stone, and/or other objectionable materials. Topsoil shall be in accordance with the requirements of this Specification.

F. Wherever trenches have been cut across or along existing pavement, temporarily pave the backfill of such trenches by placing Class A, Grade D, crushed stone as the top 12 inches of the backfill. Maintain this temporary pavement either until the permanent pavement is restored or until the project is accepted by the Owner.

G. Conduct backfilling around manholes, inlets, outfalls, and/or structures in the same manner as specified above for pipelines except that even greater care is necessary to prevent damage to the utility structure.

H. Wherever pipes have diameters of 15 inches or less, do not use power operated tampers to tamp that portion of the backfill around the pipe within one foot above the pipe.

I. Perform backfilling so as not to disturb or injure any pipe and/or structure against which the backfill is being placed. If any pipe or structure is damaged and/or displaced during backfilling, open up the backfill and make whatever repairs are necessary.

J. Backfilling and clean-up operations shall closely follow pipe laying; failure to comply with this provision will result in the Owner requiring that the Contractor's other activities be suspended until backfilling and clean-up operations catch up with pipe laying.

K. Install line markers directly above pipeline alignment at intervals of 1,000 feet where indicated on the Drawings. Line markers shall be installed after final clean-up is completed.

3.5 TESTING OF GRAVITY SEWERS

A. Visual Tests:

© 2012 City of Franklin, Tennessee. All rights reserved.

1. Upon completion of the construction or earlier if the Owner deems advisable, the Resident Project Representative will make a visual inspection of the sewer and construction site. Immediately repair all leaks and defects found by such inspection.
2. In addition to general cleanup and leakage, the following standards shall be used to determine failure or defects of this project.
   a. Sewers shall be built so as to remain true to line and grade. The inclining grade of the bottom of the sewer after completion shall be such that, after flooding, the flood water drains off so that no remaining puddle of water is deeper than 1/2 inch on pipe 36 inch internal diameter or smaller and 3/4 inch on pipe larger than 36 inch internal diameter. Any section of pipe that does not comply with the specifications at any time previous to final acceptance of the work shall be replaced or re-laid at the Contractor's expense.
   b. The Contractor will be held strictly responsible that all parts of the work bear the load of the backfill. If cracks 1/100 inch develop in the pipe within one year from the date of final acceptance of the work, the Contractor will be required to replace, at his expense, all such cracked pipe. To this end, the Contractor is advised to purchase pipe under a guarantee from the manufacturer, guaranteeing proper service of sewer pipe under conditions established by the drawings, specifications, and local conditions at the site of the work.

B. Air Testing for Sewers 21 Inches and Smaller: Perform low pressure air testing as follows:
1. Furnish all equipment, facilities, and personnel necessary to conduct the test. The test shall be observed by the Resident Project Representative.
2. Make the air test after all services have been installed and backfilling has been completed and compacted.
3. Perform the first series of air tests after 2,000 LF but before 4,000 LF of sewer has been laid. The purpose of this first series of tests is to assure both the Contractor and the Owner that the materials and method of installation meet the intent of these specifications. Conduct the remainder of the tests after approximately each 10,000 LF has been laid.
4. Plug all tees and ends of sewer services with flexible joint plugs or caps securely fastened to withstand the internal test pressures. Such plugs or caps shall be readily removable, and their removal shall provide a socket suitable for making a flexible jointed lateral connection or extension.
5. Prior to testing, check the pipe to see that it is clean. If not, clean it by passing a full-gage squeegee through the pipe. It shall be the Contractor's responsibility to have the pipe cleaned.
6. Immediately following this check or cleaning, test the pipe installation with low pressure air. Supply the air slowly to the plugged pipe installation until the internal air pressure reaches 4.0 psi more than the average back pressure of any ground water that may submerge the pipe. Allow at least three minutes for temperature stabilization.
7. The pipeline shall be considered acceptable when tested at an average pressure of 3.0 psi more than the average back pressure of any ground water that may submerge the pipe, if the section under test does not lose air at a rate greater than that specified. Calculate the pressure drop as the number of seconds for the air pressure to drop from a stabilized pressure of 3.5 to 2.5 psi more than the average back pressure of any ground water that may submerge the pipe. Calculate time as described in ASTM C828.
8. The requirements of this specification shall be considered satisfied if the time required in seconds for the pressure to decrease from 3.5 to 2.5 psi more than the average back

© 2012 City of Franklin, Tennessee. All rights reserved.

pressure of any ground water that may submerge the pipe is not less than that shown in the following table:

MINIMUM TEST TIME AND ALLOWABLE AIR LOSS VALUES

Pipe Size	Minimum Test Time in Seconds Per 100 LF	Allowable Air Loss in CFM
4 inch	25	2.0
6 inch	42	2.0
8 inch	72	2.0
10 inch	90	2.5
12 inch	108	3.0
15 inch	126	4.0
18 inch	144	5.0
21 inch	180	5.5

9. If the pipe installation fails to meet these requirements, the Contractor shall determine at his own expense the source or sources of leakage and repair or replace all defective materials or workmanship. The completed pipe installation shall meet the requirements of this test before being considered acceptable.
10. The recommended procedures for conducting acceptance tests are as follows:
    a. Clean pipe that is to be tested.
    b. Plug all pipe outlets with suitable test plugs, and brace each plug securely.
    c. Increase gage pressure in the test by the amount of ground water pressure at the crown of the pipe.
    d. Add air slowly to the portion of the pipe installation being tested until the internal air pressure is raised to 4.0 psi more than the average back pressure above the crown of the pipe.
    e. After the above internal pressure is obtained, allow at least two minutes for air temperature to stabilize, adding only the amount of air required to maintain pressure.
    f. After two minutes, disconnect the air supply.
    g. When pressure decreases to 3.5 psig either by leaking down or by bleeding down with a release valve, start the stopwatch, and determine the time in seconds that is required for the internal air pressure to reach 2.5 psig. Compare this time interval as calculated above. If the time is more than that calculated, the test shall be assumed to be acceptable.
11. Plugs used to close the sewer pipe for the air test must be securely braced to prevent the unintentional release of a plug, which can become a high velocity projectile. Locate gages, air piping manifolds, and valves at the top of the ground. No one shall be permitted to enter a manhole where a plugged pipe is under pressure. Four pounds air pressure (gage) develops a force against the plug in a 12 inch pipe of approximately 450 pounds. Provide a safety release device set to release at 10 psi between the air supply and the sewer under test.

C. Air Testing for Sewers Larger than 21 Inches:
1. Test each full segment of pipe for air tightness at 3.5 psig for the minimum dwell period specified. Seal pipe ends with suitable restrained closure. Pressurize the pipe with air at 3.5 psig and cut off the air source. Commence timing the dwell period specified. If

© 2012 City of Franklin, Tennessee. All rights reserved.

the pressure falls below 3.0 psig within the test period the segment shall be rejected. Contractor shall make corrections at his own expense.

2. All other recommended procedures for conducting pressure testing as described in 3.04.B shall be followed.

MINIMUM TEST TIMES AND ALLOWABLE AIR LOSS VALUES (0.5 psig Pressure Drop)

Pipe Size	Minimum Test Time in Seconds (Minutes) per 100 LF	Allowable Air Loss in CFM
24 inch	216 (3.6)	6.0
27 inch	252 (4.2)	6.5
30 inch	288 (4.8)	7.0
36 inch	360 (6.0)	8.0
42 inch	438 (7.3)	9.0
48 inch	510 (8.5)	10.0

3. Air testing of pipes more than 30 inch in diameter shall not be performed unless necessary because of the difficulty of adequately blocking the plugs. Provide a safety release device set to release at 10 psi between the air supply and the sewer under test.

D. Infiltration Testing:

1. Ground water above the pipe will reduce air loss. If the section of line under test shows significant infiltration, the Contractor, at no added compensation over the Contract price for the sewers, shall furnish, install and maintain a V-notch sharp crested weir in a wood frame tightly secured at the low end of each sewer lateral and at locations on the main sewers directed by the Owner. Maximum allowable infiltration shall be 25 gallons per mile per inch of diameter of sewer per 24-hour day at any time. The joints shall be tight, and visible leakage in the joints or leakage in excess of that specified above shall be repaired at the Contractor's expense by any means found to be necessary.
2. When infiltration is demonstrated to be within the allowable limits, the Contractor shall remove such weirs.
3. Infiltration tests may be required for the complete line or any portion thereof. Failure of any part of the line to pass an infiltration test shall be sufficient reason to require additional work by the Contractor to reduce the amount of infiltration in such portion of the line tested.
4. The passing of an infiltration test shall in no way relieve the Contractor of any responsibility to repair visible leaks found during the visual inspection.
5. Infiltration testing shall be performed on sewers larger than 30 inches in diameter when the hydrostatic head outside the pipe exceeds the upstream manhole depth above the top of the pipe.

E. Exfiltration Testing:

1. For sewers larger than 30 inches in diameter the sewer shall be tested by exfiltration when infiltration testing cannot be performed.
2. The groundwater table must be maintained below the section of pipe being tested at all times.

© 2012 City of Franklin, Tennessee. All rights reserved.

3. When exfiltration testing is employed, the sewer shall be subjected to a minimum of four feet of head, or up to the top of the previously tested manhole, whichever is lesser, above the crown of the pipe at the upstream manhole of the section being tested.
4. Hold the water level constant for at least 30 minutes, adding water as necessary. Measure and record duration and quantity of water added.
5. The maximum allowable exfiltration shall be 25 gallons per mile per inch of diameter of sewer per 24-hour day.
6. If the pipe installation fails to meet the test requirements, the Contractor shall determine at his own expense the source or sources of leakage and repair or replace all defective materials or workmanship. The completed pipe installation shall meet the requirements of the test before being considered acceptable.

F. Repairs: Regardless of the outcome of any tests, repair any noticeable leak.

G. No additional payment will be made for testing gravity sewers and shall be merged into the cost of pipe.

H. Submit written testing records to the Owner documenting the results of the tests for each section of sewer between manholes. The record shall show, at a minimum, sewer size, manhole numbers, sewer length, duration of test, quantity of water added (exfiltration test), measured infiltration/exfiltration rate, and pressure loss (low pressure air test).

3.6 VISUAL INSPECTION OF MISCELLANEOUS MATERIALS

A. All material used on this project will be visually inspected by the Resident Project Representative at the site for conformance to the required specifications. When reasonable doubt exists that said material meets the specifications, the Owner may require certified mill tests, samples, and/or tests by an independent laboratory or other suitable form of verification that the material meets the required specifications.

3.7 DEFLECTION TESTING FOR PVC, CCFRPM AND PE PIPE

A. Test deflection of the pipe by passing a 9-arm pin go/no-go mandrel sized to 95 percent of the pipe diameter of the actual Pipe used with the pipe in place and covered. Make this acceptance test after backfill consolidation has occurred. The Contractor shall provide the mandrel and conduct test in presence of the Resident Project Representative.

B. No additional payment will be made for mandrel testing and shall be merged into cost of pipe.

3.8 CLEANUP

A. After completing each section of the sewer line, remove all debris, construction materials, and equipment from the site of the work, grade and smooth over the surface on both sides of the line, and leave the entire right-of-way in a clean, neat, and serviceable condition.

END OF SECTION

© 2012 City of Franklin, Tennessee. All rights reserved.

SEWER FLOW CONTROL
Section 33 3115

PART 1 - GENERAL

1.1 RELATED DOCUMENTS

A. Drawings and general provision of the Contract, including General and Supplementary Conditions and Division 01 Specification Sections, apply to this Section.

1.2 SUMMARY

A. Sewer flow control required to conduct the sewer line replacement and rehabilitation, television inspection (as applicable), sewer line testing, (as applicable), and sewer line sealing operations (as applicable) effectively. Flow control will be required for inspection or other maintenance operations, for all sewer line replacements, and when sewer line flow depth is greater than 25 percent.

1.3 PERFORMANCE REQUIREMENTS

A. It is essential to the operation of the existing sewerage system that there is no interruption in the flow of sewage throughout the duration of the Project. To this end, Contractor shall provide, maintain and operate all temporary facilities such as dams, plugs, pumping equipment (both primary and back-up units as necessary to intercept the sewage flow before it reaches the point where it would interfere with their work, carry it past their work and return it to the existing sewer downstream of their work.

B. Discharge of sewage into the construction trench shall not be permitted.

1.4 SUBMITTALS

A. Informational Submittals:
   1. Flow Control Plan: Submit at least 48 hours prior to controlling flows. Include, as a minimum, the following:
      a. Estimate of peak amount of flow to be controlled.
      b. Detailed procedures for handling peak estimated flow.
      c. Schedule.
      d. Drawing of plug, bypass pump, and pipeline locations.
      e. Listing of equipment.
         1) Bypass pump sizes, capacities, number of each size to be onsite, and power requirements including standby equipment.
         2) Bypass pipeline sizes and material types.
      f. Sewer user notification plan.
      g. Operation plan.
      h. Emergency procedures.
   2. Permits to locate and operate flow control system.

© 2012 City of Franklin, Tennessee. All rights reserved.

PART 2 - GENERAL

2.1 FLOW CONTROL SYSTEM

A. General: Provide adequate capacity and size to handle existing flows plus additional flows that may occur during periods of rainstorm. Estimate peak amount of flow to be bypassed and provide bypass flow capacity of at least 125 percent of peak flow estimate.

B. Plugs:
1. Provide with taps for connection of pressure gauges and air hoses, and flow-through capability.
2. Pipe Diameters 24 inches and Smaller: Use mechanical plugs with rubber gaskets or pneumatic plugs with rubber boots.
3. Pipe Diameters Larger than 24 inches:
   a. Use inflatable bag stoppers made in two or more pieces.
   b. Manufacturer: Lansas, Cherne Industries.

C. High-Density Polyethylene (HDPE) or Ductile Iron Discharge Piping:
1. Leak free.
2. Pressure rating at least 1.5 times the operating pressure.
3. HDPE Pressure Piping:
   a. In accordance with ASTM D3350.
   b. SDR of 32.5, maximum.
   c. Joints: Butt-fusion welded.
4. Ductile Iron:
   a. AWWA C151/A21.51, Centrifugally cast, Grade 60-42-10 iron.
   b. Joints: Rubber gasketed push-on in accordance with AWWA C111/21.11
   c. Fittings: In accordance with AWWA C110/A21.20.
5. May reuse for subsequent flow bypass pumping system placements. Owner or Engineer, at their sole discretion, shall have right to reject sections deemed unserviceable.

D. Flexible Discharge Pipe:
1. Small diameter flexible pipe may be used for low pressure and low flow conditions, as determined by the Contractor.
2. Use of this material is limited to controlling flow from 8-inch diameter collector sewer lines.

E. Bypass Pumps:
1. Fully automatic, self-priming units that do not require use of foot valves or vacuum pumps in priming system.
2. Open impeller design with ability to pump minimum 3-inch diameter solids.
3. Able to run dry for long periods of time to accommodate cyclical nature of flows.
4. Engine: Equipped to minimize noise. Noise levels shall not exceed 86 dBA at a distance of 50 feet from the source.
5. Standby Pump: One of each size to be available onsite.

© 2012 City of Franklin, Tennessee. All rights reserved.

PART 3 - EXECUTION

3.1 GENERAL

A. Notify Owner at least 48 hours prior to implementing flow control system.

B. Operate and maintain flow control system 24 hours per day, 7 days per week, including holidays, as required, to control flow.

C. When depth of flow in a pipe section is above the maximum depth specified for television inspection, joint testing, or rehabilitation, reduce flow by plugging, diverting, or pumping flow around Work area.

D. Except at pipe sags, depth of flow during television inspection and joint testing shall not exceed the requirements of Division 33 Section "Sewer Television Inspection".

E. Eliminate all flow from sewer manhole-to-manhole segments during spot repair, service connection rehabilitation, manhole construction, and sewer pipe replacement or lining within that segment.

F. If flow reaches peak estimated flow that flow control system was designed for, stop all Work that requires flow control, secure Work area, and restore flow in sewer until flow recedes.

G. After the Work is completed, return flow to replaced sewer and remove temporary equipment.

3.2 PLUGGING OR BLOCKING

A. Flow control may consist of blocking flow with mechanical or pneumatic plugs if only a small amount of flow needs to be controlled and adequate storage is available.

B. Use primary and secondary plugs for each flow control location.

C. When blocking flow is no longer needed for performance and acceptance of the Work, remove plugs in a manner that permits sewage flow to slowly return to normal without surcharging or causing other major disturbances downstream.

D. Remove temporary plugs at end of each working day and restore normal flow. If downstream work is not or cannot be completed during the workday provide, operate, and maintain bypass pumping system.

E. Use bypass pumping if the Work cannot be scheduled at a time when flow is low or completed during low flow period.

3.3 BYPASS PUMPING

A. The Contractor shall obtain approval and secure all permits for placement of temporary bypass pumping system and pipeline within public right-of-way.

B. Flow bypass shall be done in such a manner that will not damage private or public property, or create a nuisance or public menace. Pumped sewage shall be in an enclosed pipe that is adequately protected from traffic, and shall be redirected into sanitary sewer system or

© 2012 City of Franklin, Tennessee. All rights reserved.

alternatively into an enclosed tank for hauling to the wastewater treatment plant. Dumping or free flow of sewage on private or public property, gutters, streets, sidewalks, or into storm sewers is prohibited.

C. The Contractor shall submit to the Owner for approval a description of the bypass pumping methodology, and bypass pumping plan before Contractor commences sewage bypass pumping

D. The Contractor shall furnish, install, and maintain power, primary and standby pumps, appurtenances, and bypass piping required to maintain existing flows and services.

E. The Contractor shall equip pump engines with noise suppression devices to keep pump noise to a minimum and comply with applicable noise ordinances.

F. The Contractor shall be responsible for continuity of sanitary sewer service to each facility connected to the section of sewer main during the execution of the Work, and shall also bypass the main sewer flow around the pipe to be replaced, or into adjacent sanitary sewers, if available.

G. The pumps and the bypass lines shall be of adequate capacity and size to handle all flows without sewage backup to private property.

H. Disconnected sewer service lateral connections shall be accommodated by bypass pumping or containment of from time of disconnection to time of reconnection. This shall be accomplished by a mechanical pump and manifold system or by storage system such as a bladder tank system. The storage system shall be capable of holding adequate sewage from each sewer service connection for period of 24 hours. Each storage system shall be emptied or pumped during each 24-hour period and properly disposed of in accordance with TDEC requirements.

I. The Contractor shall be solely responsible for clean-up, repair, property damage costs and claims resulting from failure of the diversion system.

J. The Contractor shall submit to the Owner specifications for all pumping equipment to be used on the job (including all sizing calculations) and a list of all backup pumping equipment to be held in reserve on the Site.

K. The pumps and by-pass lines shall be of adequate capacity and size to handle all flows.

L. After Work is completed, flow shall be returned through replaced sewer and temporary equipment removed.

3.4 SERVICE LATERAL DISCONNECTION

A. When it is necessary to shutdown a private service line while work is in progress and before the service lines are reconnected, the Owner shall be notified by Contractor at least one week prior to the shutdown.

B. The Contractor will notify building occupants twice regarding service lateral disconnection by placing door hangers: (1) not less than 1 week prior and (2) not more than 24 hours prior to disconnection.

© 2012 City of Franklin, Tennessee. All rights reserved.

C. When a service lateral must be disconnected from the main for more than 1 work day, the lateral shall be positively drained or pumped a minimum of once every 24 hours. Monitor status of flow and storage. Pump lateral more frequently where flows exceed the storage capacity of the lateral or such temporary storage as may be provided by Contractor.

D. Temporarily restore services in uncompleted sections during nonwork hours.

E. Notify building occupants when work is complete and full uninterrupted service restored.

F. No service is to remain shutdown for more than a period of 8 hours, unless Contractor provides substitute services for the residents. If the service is to be shutdown for more than 8 hours and Contractor cannot provide substitute services, then Contractor shall be required to provide temporary living quarters (i.e., hotel) for the resident at no additional cost to Owner or the resident. Temporary living quarters shall be approved by Owner and coordinated through Owner.

3.5 FIELD QUALITY CONTROL AND MAINTENANCE

A. Test: Contractor shall perform leakage and pressure tests of the bypass pumping discharge piping using clean water prior to actual operation. Prior to operation, test each section of discharge piping with maximum pressure equal to 1.5 times the maximum operating pressure of system. Owner shall be given 24 hours notice prior to testing.

B. Inspection: Contractor shall inspect bypass-pumping system every 2 hours to ensure that system is working correctly.

C. Maintenance Service: Contractor shall ensure that the temporary pumping system is properly maintained and a responsible operator shall be on hand at all times when pumps are operating.

3.6 CLEANING

A. Before bypass pumping system is broken down, and moved to next section or removed at the completion of the Work, discharge sewage remaining in bypass discharge pipeline and pumping equipment to working sewer.

B. Disturbed Areas: Upon completion of bypass pumping operation, clean disturbed areas and restore to condition, including pavement restoration, at least equal to that which existed prior to start of the Work.

3.7 LIABILITY

A. Contractor shall be responsible for damages to private or public property that may result from his sewer flow control operations. Contractor shall be responsible for any violations of laws, regulations or permits and shall indemnify and hold Owner harmless for any and all damages, including but not limited to, fines and penalties that arise from such violations.

END OF SECTION

© 2012 City of Franklin, Tennessee. All rights reserved.

PART 1 - GENERAL

1.1 RELATED DOCUMENTS

A. Drawings and general provision of the Contract, including General and Supplementary Conditions and Division 01 Specification Sections, apply to this Section.

1.2 SUMMARY

A. This Section covers the cleaning of sewers to remove all debris, solids, sand, grease, grit, roots, etc. from the sewers and manholes to improve pipe flow, facilitate television inspection for sewer evaluation, for proper application of root control chemical, or as required for other specified rehabilitation.

B. The Work covered by this section includes furnishing all labor, equipment, and materials required to clean and inspect sanitary sewer lines as specified.

1.3 SUBMITTALS

A. Action Submittals: Catalog and manufacturer's data sheets for cleaning equipment.

B. Informational Submittals:
1. Sample of the finished picture from the picture capture system.
2. Equipment manufacturer's operational manual and guidelines.
3. Liquid Waste Manifest.

PART 2 - PRODUCTS

2.1 EQUIPMENT

A. Hydraulically-Propelled Equipment: The equipment used shall be of a movable dam type and be constructed in such a way that a portion of the dam may be collapsed at any time during the cleaning operation to protect against flooding of the sewer. The movable dam shall be equal in diameter to the pipe being cleaned and shall provide a flexible scraper around the outer periphery to ensure removal of grease. If sewer cleaning balls or other equipment, which cannot be collapsed, are used, special pre-cautions to prevent flooding of sewers and public or private property shall be taken.

B. Cleaning:
1. All high-velocity sewer cleaning equipment shall be constructed for ease and safety of operation. The equipment shall have a selection of two or more high-velocity nozzles. The nozzles shall be capable of producing a scouring action from 15 to 45 degrees in all size lines designated to be cleaned. Equipment shall also include a high-velocity gun for washing and scouring manhole walls and floor and produce at least 2,000 psi pressure. The gun shall be capable of producing flows from a fine spray to a solid stream.
2. Sewer line cleaning equipment shall be a combination of high-velocity (hydro-cleaning) jet and vacuum system, truck-mounted for mobility and ease of operation. The hydro-cleaning equipment for sewer lines shall include a minimum 1,000-gallon water storage tank, auxiliary engines and pumps, and include a minimum of 600 feet of 1-1/4-inch I.D. high-pressure hose on a power driven hose reel. Pump nozzle combinations shall be

© 2012 City of Franklin, Tennessee. All rights reserved.

capable of producing water flow rates up to 120 gpm, and a minimum of 60 gpm at a working pressure up to 2,000 psi. The vacuum system shall be a positive displacement blower with a minimum of 4,200 cfm at 15 inches of mercury. The Owner must approve any variations to this pumping rate, in advance.

3. A working pressure gauge shall be used on the discharge of all high-pressure water pumps.
4. Contractor shall use in addition to conventional nozzles, a nozzle which directs the cleaning force to the bottom of the pipe for sewers 18-inch and larger.

C. Heavy Cleaning: Bucket machines shall be in pairs with sufficient power to perform the work in an efficient manner. Machines shall be belt operated or have an overload device. Machines with direct drive that could cause damage to the pipe will not be allowed. A power rodding machine shall be either a sectional or continuous rod type capable of holding a minimum of 750 feet of rod. The rod shall be specifically heat-treated steel. To ensure safe operation, the machine shall be fully enclosed and have an automatic safety clutch or relief valve.

PART 3 - EXECUTION

3.1 GENERAL

A. Prior to the start of any Work under this Project, Contractor shall make available to Owner and Engineer all equipment that is to be utilized in the execution of this contract. The Owner will hold a preconstruction conference at which the sequence of work, methods, inspection, and monitoring requirements and debris disposal shall be discussed.

B. When sewer flow depth is greater than 25 percent, flow depth shall be decreased by plugging or bypass pumping. Plugs shall be designed to pass any desired portion of sewage flow. If bypass pumping is required, Contractor shall provide all necessary equipment, manpower, and expertise. Contractor shall be responsible for all damage to public or private property resulting from these operations.

C. Designated sanitary sewers and manholes shall be cleaned using mechanical hydraulically propelled or high-velocity sewer cleaning equipment. The cleaning process shall remove all grease, roots, sand, silt, solids, rags, debris, etc. from each sewer segment, including the manhole(s).

D. Selection of cleaning equipment and the method for cleaning shall be based on the condition of the sanitary sewer mains at the time Work commences and will be subject to Owner's approval.

E. All cleaning equipment and devices shall be operated by experienced personnel.

F. Satisfactory precautions shall be taken to protect the sanitary sewer mains and manholes from damage that might be inflicted by the improper use of the cleaning process or equipment. Any damage done to a sewer by Contractor shall be repaired by the Contractor at no additional cost to Owner and to the satisfaction of Owner and Engineer.

G. Cleaning shall also include the initial manhole wall washing by high-pressure water jet.

H. Contractor, when instructed by Owner, will be required to demonstrate the performance capabilities of the cleaning equipment proposed for use on the Project. If the results obtained

© 2012 City of Franklin, Tennessee. All rights reserved.

by the proposed sanitary sewer cleaning equipment or attachments are not satisfactory, Contractor shall use different equipment/attachments, as required, to meet Specifications. More than one type of equipment/attachments may be required at a location.

I. When hydraulic or high-velocity cleaning equipment is used, a suitable sand trap, weir, dam, or suction shall be constructed in the downstream manhole in such a manner that all the solids and debris are trapped for removal.

J. If water backups a lateral and enters a building or residence during cleaning, the Contractor shall notify the Owner and Engineer of the occurrence. It is the Contractor's responsibility to clean any backups which occur. If prior knowledge of backups is available, the Contractor shall take measures to prevent another backup from occurring (i.e., plugging the lateral) before cleaning.

3.2 HYDRAULIC CLEANING

A. Prior to televising, Contractor shall thoroughly clean the pipelines of debris, grease, roots, sediment, broken pipe, or other obstructions that could retard the movement of the television camera. Precautions shall be taken to protect the sewer lines being cleaned from damage by the cleaning equipment.

B. Hydraulically propelled devices, which require a head of water to operate, shall utilize a collapsible dam. The dam shall be easily collapsible to prevent damage to the sewer, property, etc.

C. When using hydraulically propelled devices, precautions shall be taken to ensure that the water pressure created does not cause damage or flooding to public or private property.

D. Contractor shall not increase the hydraulic gradient of the sanitary sewers beyond the elevation that could cause overflow of sewage into area waterways or into structures.

3.3 HIGH-VELOCITY CLEANING

A. Contractor shall operate the equipment so that the pressurized nozzle continues to move at all times.

B. The pressure nozzle shall be turned off or water pressure be reduced anytime the hose is held or delayed in order to prevent damage to the line. In heavy debris the step cleaning method should be used.

3.4 MECHANICAL CLEANING

A. Mechanical cleaning, in addition to normal cleaning when required by Owner, shall be approved equipment and accessories driven by power winching devices.

B. All equipment and devices shall be operated by experienced operators in an effort to prevent pipe damage during the cleaning process.

C. Buckets, scrappers, scooters, porcupines, kites, heavy duty brushes, metal pigs and other debris removing equipment/accessories shall be used as appropriate and necessary in the field, in conjunction with the approved power machine(s).

© 2012 City of Franklin, Tennessee. All rights reserved.

D. The use of cleaning devices such as rods, metal pigs, porcupines, root saws, snakes, scooters, sewer balls, kites and other approved equipment, in conjunction with hand winching device, or, gas, electric rod propelled devices, shall be considered normal cleaning equipment.

3.5 WATER USAGE

A. Any and all water from the Owner used by Contractor shall be from a metered supply with an approved backflow device to protect the water supply. All metered water supply shall be paid to the Owner through the regular billing system. See water billing for fee amounts.

B. Contractor shall be responsible for obtaining transient water meter(s) from Owner, which shall be installed on the trucks or at fire hydrant(s). All related charges for the set-up shall be considered incidental to the cleaning of the existing sanitary sewer mains.

C. Contractor shall be responsible for preventing contamination of the potable water system. When drawing water from a public hydrant, Contractor shall use a backflow preventer or an 18-inch air gap.

D. No fire hydrant shall be obstructed or used when there is a fire in the area.

E. It shall be Contractor's responsibility to obtain approval to use Owner's fire hydrants.

F. The WMD will install and remove all temporary fire hydrant meters.

3.6 REMOVAL AND DISPOSAL OF DEBRIS

A. All materials removed from the sewer lines during cleaning operations shall be trapped and removed from the system at the downstream manhole of the section being cleaned. All materials shall be disposed of in compliance with all applicable laws and regulations and in a manner approved by Owner.

B. Passing of debris from upstream manhole section to downstream manhole section will not be allowed.

C. All debris from the manholes shall be loaded into an enclosed container that is permitted by Owner and the Tennessee Department of Environment and Conservation (TDEC) for liquid waste hauling.

D. All solids or semi-solids resulting from the cleaning operations shall be removed from the Site at the end of each workday, and disposed of properly at the Contractor's expense.

E. Contractor shall not be allowed to accumulate debris, or liquid waste, sludge, etc. on the Site.

F. Under no circumstances shall sewage or solids removed in the cleaning process be dumped onto streets or into ditches, catch basins, storm drains, sanitary sewer manholes, cleanouts, or dumps.

END OF SECTION

© 2012 City of Franklin, Tennessee. All rights reserved.

SEWER TELEVISION INSPECTION
Section 33 3130

PART 1 - GENERAL

1.1 RELATED DOCUMENTS

A. Drawings and general provisions of the Contract, including General and Supplementary Conditions and other Division 01 Specification Sections, apply to this Section.

1.2 SUMMARY

A. The Work covered by this section includes furnishing all labor, equipment, and materials required to clean and inspect the designated sanitary sewer lines specified.

B. Closed-circuit television inspection of sanitary sewers as follows:
   1. TV inspection on all lines proposed for rehabilitation under this Contract shall be performed where no videotape of the sewer is available from Owner.
   2. TV inspection of line segments specified for chemical root removal, shall be required to confirm cleaning and location of service connections.
   3. Contractor shall use an industry standard Television Inspection Form.
   4. Digital videos, data, and photos shall be delivered to the Owner on DVD or CD-ROM.

1.3 SUBMITTALS

A. Action Submittals: Catalog and manufacturer's data sheets for television equipment.

B. Informational Submittals:
   1. References: Contact names and telephone numbers.
   2. List of staff and equipment to be used on project.
   3. Crew chief qualifications.
   4. Traffic control plan.
   5. Initial first days CCTV digital videos and inspection logs within 24 hours of start of CCTV inspection.
   6. Certification that staff to be used for the Work is properly trained in confined space entry and hazardous atmospheres.
   7. Final report.

1.4 QUALITY ASSURANCE

A. Qualifications:
   1. Contractor: Performed work successfully for at least three other projects, within last 5 years, with pipe lengths and pipe diameters similar to this project.
   2. Crew Chief: Minimum of 5 years experience on projects similar to this project and experienced using proposed equipment for this project.

1.5 NOTIFICATIONS

A. Notify Owner:
   1. A minimum of 5 days prior to the anticipated commencement of inspections in any one area and 24 hours in advance of actual start.
   2. When obstruction, restricting flow in pipeline, is discovered.
   3. If depth of flow in pipeline exceeds 33 percent of pipe diameter.

© 2012 City of Franklin, Tennessee. All rights reserved.

4. If conditions for CCTV inspection are found to be unsafe or impractical.
5. Pipe configuration in field is different than shown on maps. Notification shall include diagram clearly indicating location of structure in relation to immediately adjacent structures.

PART 2 - PRODUCTS

2.1 TELEVISION INSPECTION EQUIPMENT MATERIALS

A. All HDPE pipe and fittings shall comply with the ASTM F714.

B. All HDPE pipe and fittings shall have minimum Standard Diameter Ratios (SDRs) as specified on the Drawings.

C. HDPE pipe shall be supplied in standard laying lengths not exceeding 50 feet.

D. HDPE pipes and fittings shall be homogeneous throughout and free of visible cracks, holes (other than intentional manufactured perforations), foreign inclusions, or other deleterious effects, and shall be uniform in color, density melt index and other physical properties.

E. Fittings at the ends of pipes shall consist of HDPE end caps unless indicated otherwise on the Drawings.

2.2 IDENTIFICATION

A. The following shall be continuously indent printed on the pipe, or spaced at intervals not exceeding 5 feet:
   1. Name and/or trademark of the pipe manufacturer.
   2. Nominal pipe size.
   3. Standard dimension ratio (SDR).
   4. The letters PE followed by the polyethylene grade per ASTM D1248, followed by the Hydrostatic Design basis in 100s of psi (e.g., PE 3408).
   5. Manufacturing Standard Reference (e.g., ASTM F-714-1).
   6. A production code from which the date and the place of manufacture can be determined.

PART 3 - EXECUTION

3.1 PREPARATION

A. Prior to televising, Contractor shall thoroughly clean the pipelines of debris, grease, roots, sediment, broken pipe, or other obstructions that could retard the movement of the television camera. Precautions shall be taken to protect the sewer lines being cleaned from damage by the cleaning equipment.

B. Immediately after cleaning, the sewer line section shall be visually inspected by means of closed-circuit television to determine the condition of the line and to locate existing service connections. The inspection will be done one manhole section at a time and the flow in the

© 2012 City of Franklin, Tennessee. All rights reserved.

section being inspected will be suitably controlled as specified. (See Division 33 Section "Sewer Flow Control").

1. Contractor shall not be allowed to float the camera unless permitted by Owner.

C. All internal pipe damage shall be photographed in color by Contractor utilizing picture capture equipment, and shall be clearly labeled as to date, each number, footage, and type of defect. The photographs shall be the property of Owner.

3.2 TELEVISION INSPECTION

A. The camera shall be moved through the line in either direction at a moderate rate, stopping when necessary to permit proper documentation of the sewer line section condition. In no case will the television camera be pulled at a speed greater than 30 feet per minute. Manual winches, power winches, TV cable, and powered rewinds or other devices that do not obstruct the camera view or interfere with proper documentation of the sewer conditions shall be used to move the camera through the sewer line. Contractor is required to provide running water within the pipe during TV inspections.

B. When manually operated winches are used to pull the television camera through the line, telephones or other suitable means of communication shall be set up between the two manholes of the section being inspected to ensure good communications between members of the crew.

C. The importance of accurate distance measurements is emphasized. Measurement for location of defects shall be above ground by means of a meter device. Marking on the cable, or the like, which would require interpolation for depth of manhole, will not be allowed. Accuracy of the distance meter shall be checked by use of a walking meter, roll-a-tape, or other suitable device; accuracy shall be satisfactory to Owner.

D. The camera height shall be adjusted such that the camera lens is always centered in the pipe being televised.

E. Lighting system shall be adequate for quality pictures. A reflector in front of the camera may be required to enhance lighting in black pipe.

3.3 PASSAGE OF TV CAMERA

A. It is the intent of the Scope of Work to inspect the full length of sewer between each manhole, but there may be occasions during the TV inspection of a sewer line section, when the camera will be unable to pass an obstruction even though flow is continuing. If, during the inspection operation, the television camera will not pass through the entire manhole section, the Contractor shall set up his equipment so that the inspection can be performed from the opposite manhole. No additional payment shall be made for reverse set-ups required due to an obstruction.

1. When the camera is being pulled from the “other end” and a second repair location is encountered away from the first repair/obstruction location, Owner shall be notified and allowed to review the TV DVD at the Site in a timely manner. Obtain Owner’s permission to make the two point repairs. No downtime shall be allowed.
   a. If the repairs are allowed and completed, Contractor shall again proceed to re-televise the sewer line section. Generally, up to 20 feet of the line from each of

© 2012 City of Franklin, Tennessee. All rights reserved.

the ends of the repairs may be lamped or physically inspected at the Site, to verify the condition of the line without further TV.

2. Owner makes no guarantee that all of the sanitary sewer mains proposed to be TV inspected after the cleaning, are clear for the passage of the camera set-up. The equipment, tools and method(s) used for securing the passage of the camera are to be at the discretion of Contractor, with the approval of Owner. The decision to repair or not to repair a location shall always be made by Owner.

B. TV videos shall be submitted in one continuous section from manhole to manhole, and not in broken pieces, unless specifically approved by Owner.

C. Roots shall be removed in the sections where root intrusion is a problem. Special precautions should be exercised during the cleaning operation to assure complete removal of visible roots from the joint area. Any visible roots that may impact rehabilitation efforts shall be removed. Procedures may include the use of mechanical devises such as rodding machines, expanding root cutters and porcupines, and hydraulic procedures such as high-pressure jet cleaners.

D. To aid in the removal of roots and at the option of Contractor, sewer sections that have root intrusion may be treated with an Owner-approved herbicide. The application of the herbicide to the roots shall be done in strict accordance with the manufacturer's recommendations and specifications in such a manner to preclude any damage to the surrounding vegetation. Contractor shall replace any damaged vegetation so designated by Owner or Engineer, at no additional cost to Owner. All safety precautions as recommended by the manufacturer shall be strictly adhered to concerning handling and application of the herbicide.

E. Contractor, after cleaning a section of pipe, shall utilize the television camera to inspect the main. No line shall be considered cleaned until Owner approves.

F. The television camera shall travel through the lines using its own power. The pictures taken of the entire inside periphery of the pipe shall be clear and visible. Picture quality and definition shall be to the satisfaction of Owner, and if unsatisfactory, the equipment shall be removed and no payment made for the unsatisfactory inspection.

G. At all service laterals the camera shall be stopped and panned to such an angle that an internal view of the service lateral is available to determine if the lateral is active or dead or plugged. Where other pipe deficiencies are noted, the camera shall be stopped to observe the condition, record information and take photographs. Any service lateral or deficiency observed in the sewer line shall be photographed and described on the photograph.

3.4 DOCUMENTATION

A. Contractor shall submit in electronic format digital videos, photos, and evaluation reports, to Owner.

B. The digital video shall be recorded at Standard Play and each digital video segment information entered in the software as required under Article Basic Module (1) – Survey/Logging Report.

C. If digital videos are of such poor quality that Owner is unable to evaluate the condition of the sanitary sewer main, locate the sewer service connections, or verify the cleaning Contractor

© 2012 City of Franklin, Tennessee. All rights reserved.

shall be required to re-televise the sanitary sewer and provide a new digital videos of good quality, at no additional cost to Owner.

D. All digital videos will become the property of Owner.

3.5 BASIC MODULE (1)—SURVEY/LOGGING REPORT

A. The software's core module shall be capable of providing complete survey reports and be PACP (Pipeline Assessment and Certification Program) certified by NASSCO. The software shall be the latest version of Subcam.

B. There shall be PACP Complaint codes pre-programmed and grouped by PACP Groups.

C. The software shall be capable of customization with the ability to modify or add to the pipeline condition and group them for ease of use.

D. The footage reading from the camera equipment shall be automatically entered into the Survey Log through RS232 cable and shall directly correspond to the noted defect location throughout the pipe graphic and tabular reports generated.

E. The inspection and reporting software program shall be menu-driven and shall have a complete on-screen help file.

F. Drop-down boxes shall be utilized to quickly reference common information such as defects, pipe materials, survey purpose, locations, pipe usage, etc.

G. The browser screen shall allow quick viewing of:
1. Sequential survey/segment as setup number (automatic input by software).
2. User-selected categories.
3. Up-stream and down-stream manhole numbers.
4. Street name.
5. Pipe segment details.
6. Drainage basin number.

H. All relevant pipe segment information shall be entered prior to the actual survey. The below listed minimum pipe details must be supplied in the software for proper system management. The graphic and tabular survey reports generated shall include the following information:
1. Pipe diameter.
2. Starting manhole number.
3. Ending manhole number.
4. Starting manhole depth.
5. Ending manhole depth.
6. Direction of survey.
7. Pre-clean (y/n).
8. Total surveyed length.
9. Pipe material.
10. Pipe section length.
11. Pipe shape.
12. Road name.
13. Address or place name.
14. Work Order number.

© 2012 City of Franklin, Tennessee. All rights reserved.

15. Video CD number.
16. Engineering drawing number.
17. Purpose of survey.
18. Pipe age (year of construction).
19. Inspection of survey date.

I. Subcam software (latest version) shall maintain a database of underground pipe and manhole assets. The database(s) shall have structure similar to the one referencing pipe usage (i.e., sanitary storm drainage, etc.) sections (i.e., projects, areas, or quadrants). Surveys shall include a method of pipe segment numbering and a chronological survey set-up numbering system.

J. Subcam's basic module database shall have the means to sort in ascending and descending order according to date, pipe segment, reference number, road name, manhole number(s), observed footage, pipe materials, pipe diameters, work order numbers, etc. A filtering system shall also be made available.

K. The basic module software shall have search capabilities in order to find information about past surveys located in the database(s).

L. A summary paragraph shall be made available for a conclusive pipe segment assessment.

M. The graphical reports shall print in color for quick glance referencing of the defect category. The color-coding scheme shall allow for quick reference as to the quality of service, structural, hydraulic, and constructional defects within a particular survey.

N. A scoring system incorporated in the software will assist the user/management personnel in making proper assessment of pipe conditions. Scoring is to be based upon defect severity entered by the operator.

O. An inspection "health check" feature shall be incorporated to insure that the information has been correctly entered. The health check allows for verification of essential information to complete a survey. This feature can be implemented individually or on a total selection basis.

P. A Site sketch feature shall also be supplied so that a drawing or sketch shall indicate special details or locations about a particular set-up Site.

Q. The software shall also have the capability to import and export survey results in a variety of industry standard formats.

3.6 BASIC MODULE (1)—SUMMARY REPORTING

A. Summary reports compiling data from multiple inspections shall be available. Such reports shall indicate individual survey results in tabular from and list (sort) surveys based on a user-defined description field.

B. Defect report shall be programmable to list specific defects observed with corresponding footage, starting and ending manhole number, structural pipe defects (i.e., cracks, offsets, defective laterals, collapsed pipe, etc.) and service-oriented defects (i.e., roots, grease, obstructions, infiltration, etc.).

© 2012 City of Franklin, Tennessee. All rights reserved.

C. A drainage schedule report shall include starting and ending manhole numbers, depths, pipe material, total survey length, and pipe diameter.

D. The grading scores report shall summarize the manhole numbers, pipe material, pipe diameter, and the grade scores for each survey with totals.

E. Service and structural aspect scoring reports are to list the pipe segment, reference number, total observed length, number of defects, and total score with reference to the condition of the total pipe, average of the pipe, total defects, and average of defects.

F. Section summary reports are to be made available so that all surveys within a section are listed showing purpose of inspection, date, work order numbers, manholes, road names, and total lengths.

G. All software shall be compatible with Owner's current system.

3.7 EVALUATION REPORTS

A. Each video shall be accompanied by a TV inspection report, which shall be a written/narrated log of all pipe defects, sags, service connection locations and conditions, etc., recorded on a footage basis. Report shall be provided in an electronic (computer usable) format that is transferable to a Microsoft Access database.

B. The pipe defects shall include separate codes for the following: Radial Cracks, Longitudinal Cracks, Misaligned Joints, Broken Joints, Root Intrusion, Laterals, and Infiltration. The size/length of the defect shall be reported. The beginning of all sags of the pipe, the length that is underwater as well as where the camera pulls out of the sag shall be reported. The clock position of each service connection and the condition shall be reported. The condition of each service connection will include the distance protruding when appropriate and the type. All other information required for analysis such as degrees of deterioration, deformation or collapsed pipe shall be reported. All reports and/or submittals shall adhere to Pipeline Assessment Certification Program (PACP) Standards.

C. This log shall also identify the section being televised, flow and camera direction, type of pipe, pipe condition, weather conditions, type of surface cover, or any other information required by Owner.

D. Owner may provide Contractor a log form that utilizes codes for the above-mentioned defects.

E. At the end of the project, Contractor shall provide a summary listing of all videos provided under this project.

END OF SECTION

© 2012 City of Franklin, Tennessee. All rights reserved.

PART 1 - GENERAL

1.1 RELATED DOCUMENTS

A. Drawings and general provisions of the Contract, including General and Supplementary Conditions and other Division 01 Specification Sections, apply to this Section.

1.2 SUMMARY

A. This Section includes dry-well, packaged pumping stations with vacuum-primed sewage pumps.

B. Related Sections include the following:
1. Division 33 Sections "Sanitary Sewer (Gravity)" and "Sewage Force Main" for sewer piping to and from pumping stations.

1.3 DEFINITIONS / STANDARDS

A. Publications listed below form part of this specification to extent referenced in the text by basic designation only. Consult latest edition of publication unless otherwise noted.
1. American National Std. Institute (ANSI) / American Water Works Assoc. (AWWA)
   a. ANSI B16.1 - Cast iron pipe flanges and flanged fittings
   b. ANSI/AWWA C115/A21.51 - Cast/ductile iron pipe with threaded flanges
   c. ANSI 253.1 - Safety Color Code for Marking Physical Hazards
   d. ANSI B40.1 - Gages, Pressure and Vacuum
   e. AWWA C508 - Single Swing Check Valves
2. American Society for Testing and Materials (ASTM)
   a. ASTM A48 - Gray Iron Castings
   b. ASTM A126 - Valves, Flanges, and Pipe Fittings
   c. ASTM A307 - Carbon Steel Bolts and Studs
   d. ASTM A36 - Structural Steel
3. Institute of Electrical and Electronics Engineers (IEEE)
   a. ANSI/IEEE Std 100 - Standard Dictionary of Electrical Terms
   b. ANSI/IEEE Std 112 - Test Procedure for Polyphase Induction
   c. IEEE Std 242 - Protection of Industrial and Control Power Systems
4. National Electric Code (NEC) / National Electrical Manufacturers Assoc. (NEMA)
   a. NEC National Electric Code
   b. NEC 701 - National Electric Code article 701
   c. NEMA Std MG1 Motors and Generators
5. Miscellaneous References
   a. Ten-State Standards Recommended Standards for Sewage Works
   b. Hydraulic Institute Std for Centrifugal, Rotary and Reciprocating Pumps
   c. NMTBA and JIC Std National Machine Tool Builders Association and Joint Industrial Council Standards
   d. ISO 9001 International Organization for Standardization

© 2012 City of Franklin, Tennessee. All rights reserved.

1.4 SUBMITTALS

A. Product Data

1. Prior to fabrication, pump station manufacturer shall submit six copies of submittal data for review and approval.
2. Submittal shall include shop drawings, electrical ladder logic drawings, and support data as follows: Catalog cut sheets reflecting characteristics for major items of equipment, materials of construction, major dimensions, motor and v-belt drive data, pump characteristic curves showing the design duty point capacity (GPM), head (FT), net positive suction head required (NPSHr), and hydraulic brake horsepower (BHP). Electrical components used in the motor branch and liquid level control shall be fully described.
3. Shop drawings shall provide layout of mechanical equipment and anchor bolt locations for station. Pipe penetrations and station access clearances shall be dimensioned relative to the station centerline. The electrical ladder logic drawings shall illustrate motor branch and liquid level control circuits to extent necessary to validate function and integration of circuits to form a complete working system.

B. Operations And Maintenance Manuals

1. Operation shall be in accordance with written instructions provided by the pump station manufacturer. Comprehensive instructions supplied at time of shipment shall enable personnel to properly operate and maintain all equipment supplied. Content and instructions shall assume operating personnel are familiar with pumps, motors, piping and valves, but lack experience on exact equipment supplied.
2. Documentation shall be specific to the pump station supplied and collated in functional sections. Each section shall combine to form a complete system manual covering all aspects of equipment supplied by the station manufacturer. Support data for any equipment supplied by others, even if mounted or included in overall station design, shall be provided by those supplying the equipment. Instructions shall include the following as a minimum:
   a. Functional description of each major component, complete with operating instructions.
   b. Instructions for operating pumps and pump controls in all modes of operation.
   c. Calibration and adjustment of equipment for initial start-up, replacement of level control components, or as required for routine maintenance.
   d. Support data for commercially available components not produced by the station manufacturer, but supplied in accordance with specifications, shall be supported by literature from the prime manufacturer and incorporated as appendices.
   e. Electrical schematic diagram of the pump station circuits shall be in accordance with NFPA 79. Schematics shall illustrate, to the extent of authorized repair, pump motor branch, control and alarm system circuits including interconnections. Wire numbers and legend symbols shall be shown. Schematic diagrams for individual components, not normally repairable by the station operator, need not be included. Details for such parts shall not be substituted for an overall system schematic. Partial schematics, block diagrams, and simplified schematics shall not be provided in lieu of an overall system diagram.
   f. Mechanical layout drawing of the pump station and components, prepared in accordance with good commercial practice, shall provide installation dimensions and location of all pumps, motors, valves and piping.

© 2012 City of Franklin, Tennessee. All rights reserved.

3. Operation and maintenance instructions which rely on vendor cut-sheets and literature which include general configurations, or require operating personnel to selectively read portions of the manual shall not be acceptable. Operation and maintenance instructions must be specific to equipment supplied in accordance with these specifications.

C. Warranties: Special warranties specified in this Section.

1.5 QUALITY ASSURANCE

A. The manufacturer of the pump station shall have a minimum of five years experience in the design and manufacture of factory-built automatic pump stations and shall guarantee the structure and all equipment to be free from defects in materials and workmanship for a period up to two years from the date of start-up, not to exceed 30 months from the date of shipment.

B. Product Options: Drawings indicate size, profiles, and dimensional requirements of packaged pumping stations and are based on the specific system indicated. Refer to Division 01 Section "Product Requirements."

C. Electrical Components, Devices, and Accessories: Listed and labeled as defined in NFPA 70, Article 100, by testing agency acceptable to authorities having jurisdiction, and marked for intended use.

D. Hydraulic Institute Compliance: Comply with Hydraulic Institute 1.1-1.5 for sewage and sump pumps.

E. NEMA Compliance: Comply with NEMA MG 1 for electric motors.

F. UL Compliance: Comply with UL 778 for sewage and sump pumps.

G. The pumps and pump station manufacturer must be ISO 9001:2000 revision certified, with scope of registration including design control and service after sales activities.

H. Upon request from the Owner, the pump station manufacturer shall prove financial stability and ability to produce the station within the specified delivery schedules. Evidence of facilities, equipment and expertise shall demonstrate the manufacturer's commitment to long term customer service and product support.

I. In order to unify responsibility for proper operation, it is the intent of these Specifications that all system components be furnished by a single supplier (unitary source) and that source shall be the pump manufacturer. The pumps must be of standard catalog design, totally warranted by the manufacturer. Under no circumstances will a system consisting of parts compiled and assembled by a manufacturer's representative or distributor be accepted.

J. Manufacturer must show proof of original product design and testing. Products violating intellectual property regulations shall not be allowed, as they may violate international law and expose the user to unintended liabilities. "Reverse-engineered" products fabricated to substantially duplicate the design of original product shall not be allowed, as they may contain substantial differences in tolerances and material applications addressed in the original design, which may contribute to product failure.

K. The term "pump manufacturer" or "pump station manufacturer" shall be defined as the entity which designs, machines, assembles, hydraulically tests and warranties the final product.

© 2012 City of Franklin, Tennessee. All rights reserved.

Any entity that does not meet this definition will not be considered a "pump manufacturer" or "pump station manufacturer" and is not an acceptable supplier. For quality control reasons and future pump and parts availability, all major castings of the pump shall be sourced and machined in North America.

L. Pump Performance Certifications:

1. All internal passages, impeller vanes, and recirculation ports shall pass a 3" spherical solid. Smaller internal passages that create a maintenance nuisance or interfere with priming and pump performance shall not be permitted. Upon request from the Owner, manufacturer's certified drawings showing size and location of the recirculation port(s) shall be submitted for approval.
2. Reprime Performance:
   a. Consideration shall be given to the sanitary sewage service anticipated, in which debris is expected to lodge between the suction check valve and its seat, resulting in the loss of the pump suction leg, and siphoning of liquid from the pump casing to the approximate center line of the impeller. Such occurrence shall be considered normal, and the pump must be capable of automatic, unattended operation with an air release line installed.
   b. During unattended operation, the pump shall retain adequate liquid in the casing to insure automatic repriming while operating at its rated speed in a completely open system. The need for a suction check valve or external priming device shall not be required.
   c. Pump must be capable of repriming 25 vertical feet at the specified speed and impeller diameter. Reprime lift is defined as the static height of the pump suction above the liquid, while operating with only one-half of the liquid remaining in the pump casing. The pump must reprime and deliver full capacity within five minutes after the pump is energized in the reprime condition. Reprime performance must be confirmed with the following test set-up:
      1) A check valve to be installed down stream from the pump discharge flange. The check valve size shall be equal (or greater than) the pump discharge diameter.
      2) A length of air release pipe shall be installed between pump and the discharge check valve. This line shall be open to atmosphere at all times duplicating the air displacement rate anticipated at a typical pump station fitted with an air release valve.
      3) The pump suction check valve shall be removed. No restrictions in the pump or suction piping will prevent the siphon drop of the suction leg. Suction pipe configuration for reprime test shall incorporate a 2 feet minimum horizontal run, a 90° elbow and vertical run at the specified lift. Pipe size shall be equal to the pump suction diameter.
      4) Impeller clearances shall be set as recommended in the pump service manual.
      5) Repeatability of performance shall be demonstrated by testing five consecutive reprime cycles. Full pump capacity (flow) shall be achieved within five minutes during each cycle.
      6) Liquid to be used for reprime test shall be water.
3. Upon request from the Owner, certified reprime performance test results, prepared by the manufacturer, and certified by a registered professional engineer, shall be submitted for approval prior to shipment.

M. Factory System Test:

© 2012 City of Franklin, Tennessee. All rights reserved.

1. All internal components including the pumps, motors, valves, piping and controls will be tested as a complete working system at the manufacturer's facility. Tests shall be conducted in accordance with Hydraulic Institute Standards at the specified head, capacity, rated speed and horsepower. Factory operational test shall simulate actual performance anticipated for the complete station.
2. Upon request from the Owner, the operational test may be witnessed by the Owner, and/or representatives of his choice, at the manufacturer's facility.

N. The manufacturer's technical representative shall inspect the completed installation, correct or supervise the correction of any defect or malfunction, and instruct operating personnel in the proper operation and maintenance of the equipment as described in Part 3 of this Section.

1.6 PROJECT CONDITIONS

A. Existing Utilities: Do not interrupt utilities serving facilities occupied by Owner or others unless permitted under the following conditions and then only after arranging to provide temporary utility services according to requirements indicated:
1. Notify Owner not less than two days in advance of proposed utility interruptions.

1.7 WARRANTY

A. Warranties and guarantees of suppliers of various components in lieu of a single source responsibility by the pump station manufacturer will not be accepted. The pump station manufacturer shall be solely responsible for the guarantee of the station and all components. In the event a component fails to perform as specified or is proven defective in service during the guarantee period, the pump station manufacturer shall provide a replacement part without cost to the Owner. He shall further provide, without cost, such labor as may be required to replace, repair or modify major components such as pumps, pump motors and sewage piping manifold.

B. Warranty Period: Two years from date of Substantial Completion.

C. The pump station manufacturer shall furnish product and comprehensive liability insurance from an insurance company with a rating of A+ (superior) IV, according to the Best's Key Reporting Guide, in an amount equal to $5,000,000.00. The policy shall also include SUDDEN AND ACCIDENTAL POLLUTION COVERAGE. The insurance certificate must be included with the manufacturer's submittal.

1.8 MANUFACTURED EQUIPMENT EVALUATION

A. The specifications and drawings detail approved manufacturer's equipment and represent the minimum standard of quality for both equipment and materials of construction. The Contractor shall prepare his bid on the basis of this equipment for the purpose of determining the low bid without consideration of possible substitute.

B. Substitution of other makes may be considered if the equipment proposed for substitution is superior or equal in quality and efficiency to the standards of quality named in the specifications and is demonstrated to the satisfaction of the Owner.

C. Contractors wishing to offer a deduct for substitute equipment shall include the following submittal information. This submittal shall include all necessary information for the proper

© 2012 City of Franklin, Tennessee. All rights reserved.

determination of the acceptability of the proposed substitution and shall not necessarily be limited to the following:

1. Complete description of the equipment, system, process or function, including a list of system components and features, drawings, catalog information and cuts, manufacturer's specifications, including materials descriptions.
2. Performance data and curves, and horsepower requirements.
3. Outside utility requirements, such as water, power, air, etc.
4. Functional description of any internal instrumentation and controls supplied including list of parameters monitored, controlled or alarmed.
5. Addresses and phone numbers of nearest service centers and a listing of the manufacturer's or representative's services available at these locations, including addresses and phone numbers of the nearest parts warehouses capable of providing full parts replacement and/or repair services.
6. A list of five installations in the states where similar equipment by the manufacturer is currently in similar service; include contact name, telephone number, mailing address of the municipality or installation; engineer, owner, and installing contractor. If five installations do not exist, the list shall include all that do exist, if any.
7. Detailed information on site, architectural, structural, mechanical, plumbing, electrical and control, and all other changes or modifications to the design and construction work necessary to adapt the equipment or systems to the arrangement shown and/or functions described on the drawings and in the technical specifications. This shall include plan view and section sketches illustrating any additional space requirements necessary to provide the minimum adequate clear space within and around the equipment for operation and maintenance, as shown on the drawings and specified.
8. All differences between the specifications and the proposed substitute equipment shall be clearly stated in writing under a heading of "differences".
9. Other specific submittal requirements listed in the detailed equipment and material specifications.

D. Approval of the substitution to bid as an alternate shall in no way relieve the Contractor from submitting the specified shop drawings for approval or complying fully with all provisions of the specifications and drawings. If substituted equipment is accepted, the Contractor shall, at his own expense, make any changes in the structures, piping, electrical, etc. necessary to accommodate the equipment. If engineering is required due to substitution of alternate equipment, the Contractor shall pay for all engineering changes. To receive final consideration, copies of the manufacturer's quotations for the equipment may be required to document the savings to the satisfaction of the Owner. It is the intent that the Owner shall receive the full benefit of the savings in cost of the equipment and the Contractor's bid price shall be reduced by an amount equal to the savings. In all technical and other evaluations, the decision of the Owner is final.

PART 2 - PRODUCTS

2.1 SYSTEM DESCRIPTION

A. The packaged wastewater pumping system provided as required by this Specification shall be a complete, factory built stand alone, pumping system with an enclosure suitable for above-ground outdoor installation, and shall include an emergency "quick connect" coupling, as specified by the Owner.

© 2012 City of Franklin, Tennessee. All rights reserved.

B. In addition to the station enclosure, principle items of equipment shall include two (or three) horizontal, self priming, centrifugal sewage pumps, V-belt drives, motors, internal piping, valves, motor control panel, automatic liquid level control system, and internal wiring.

C. The packaged wastewater pumping system shall be delivered preassembled and on a single skid requiring only connection of suction piping, discharge piping, electrical service, and termination of instrumentation and control wiring.

D. Emergency supplemental power shall be provided as directed by the Owner.

2.2 MANUFACTURERS

A. Approved Manufacturers:
   1. Gorman-Rupp Company

B. Terminology used may include reference to that manufacturer's performance and product. Such reference shall be construed only as establishing quality of materials and workmanship to be used under this Section. It shall not in any way, be construed as limiting competition.

2.3 DESIGN REQUIREMENTS

A. Operating Conditions:
   1. Ambient Air Temperature:
      a. Maximum 105 F
      b. Minimum 10 F
   2. Outdoor Continuous Service
   3. Altitude 600 ft msl

B. Electrical Service: Electrical service provided at the pump station site shall be 480V, 3 phase, 60 cycle, 4 wire service as provided by the local electric utility. Voltage tolerance shall be plus or minus 10 percent. Phase-to-phase unbalance shall not exceed 1% average voltage as set forth in NEMA Standard MG-1. Control voltage shall not exceed 132 volts.

C. All electrical control panels and valves shall be above ground.

D. All stations shall be located within a site prepared, landscaped, fenced area and provided with a permanent asphalt drive, or approved equal, accessible at all times. The site must provide adequate area for the WMD personnel to maneuver onsite.

E. The access road to the pump station shall be a minimum of twelve (12) feet wide.

F. The slope of the drive shall not exceed twelve (12) percent.

G. Provisions shall include sufficient right-of-way for overhead power and telephone service.

H. All stations shall have a water supply for maintenance.

I. Exterior security lights shall be installed at every station.

J. All pumping stations shall have back up air compressors.

© 2012 City of Franklin, Tennessee. All rights reserved.

K. The station's operational components shall be located at an elevation that is not subject to the 100-year flood or shall otherwise be adequately protected against the 100-year flood damage. The top (floor) of the pumping station shall be a minimum of 6 inches above the finished grade of the site around the station. Where the wet well is at a depth greater than the water table elevation, special provisions shall be made to ensure water tight construction of the wet well. Any connections to the pump station should be made at an elevation higher than the maximum water table elevation, where possible.

L. In general, lift stations shall have an approved backflow preventor. Details of this installation shall be approved prior to installation. The backflow preventor shall be installed such that it is protected from freezing and in a manner to allow for proper drainage and testing.

M. Provide a diagram detailing how to bypass the pumps. This diagram shall be displayed within the station enclosure so that it can be easily located.

2.4 SERVICE AND CAPACITY

A. Packaged wastewater pumping systems must be designed to handle raw, unscreened, domestic sanitary sewage. The packaged wastewater pumping system shall provide unattended, alternating duplex pump operation.

2.5 STATION ENCLOSURE

A. The station enclosure shall provide sufficient inside area for maintenance personnel to perform normal operation and maintenance inside, sheltered, and free from foul weather. The enclosure shall consist of a base to support the pumps and a cover. Minimum dimensions of the enclosure shall be eight feet by twelve feet and nine feet in height.

B. The station enclosure shall be manufactured of molded fiberglass reinforced orthophthalic polyester resins with a minimum of 30% fiberglass, and a maximum of 70% resin. Glass fibers shall have a minimum average length of 1¼ inches. Resin fillers or extenders shall not be used. Major design considerations shall be given to structural stability, corrosion resistance, and water-tight properties. The polyester laminates shall provide a balance of mechanical, chemical, and electrical properties to insure long maintenance free life. They must be impervious to micro-organisms, mildew, mold, fungus, corrosive liquids, and gases which can reasonably be expected to be present in the environment surrounding the wet well. Wood core type enclosures shall not be considered acceptable and shall be basis for equipment rejection. See manufacturer's requirements for enclosure warranty in these specifications.

C. All interior surfaces of the housing shall be gel coated with a polyester resin. It shall be of suitable thickness and formulated to provide:
   1. Maintenance-free service
   2. Abrasion resistance
   3. Protection from sewage, greases, oils, gasoline, and other common chemicals.
   4. Color fastness
   5. Gloss retention

© 2012 City of Franklin, Tennessee. All rights reserved.

D. Interior surfaces of the enclosure cover shall be white for maximum light reflectivity. The base shall be of a darker color to de-emphasize the presence of dirt, grease, etc. Colors used for both portions shall result in a pleasing looking structure.

E. The pump station shall be furnished with 1" thick foam insulation which shall be applied to the walls, door, and roof to achieve an R-6 insulation factor. A gasketed seal around the door shall also be included.

F. The outside of the enclosure shall be coated with a suitable pigmented resin compound to insure long, maintenance-free life. The fiberglass enclosure shall be a regular product of the pump station manufacturer.

G. Station base shall be constructed of pre-cast, reinforced concrete encapsulated in a fiberglass mold. The design shall resist deformation of the structure during shipping, lifting, or handling. Base shall incorporate drainage provisions, and an opening sized to permit installation of piping and service connections to the wet well. After installation, the opening shall serve as a grout dam to be utilized by the Contractor. The base shall incorporate anchor bolt recesses for securing the complete station to a concrete pad (supplied by the Contractor) in accordance with the project plans.

H. Holes through the base shall be provided for suction and discharge lines, air release lines, and level control line. Holes for the suction and discharge lines shall be provided with a grout dam incorporated in a grout retention cavity which the Contractor shall fill at installation with suitable grout to seal each pipe-to-base joint against the entrance of hazardous gases from the wet well.

I. Station base shall incorporate a suitable flange designed for securing the pump station to the concrete pad in accordance with the station plans.

J. The enclosure cover shall be provided with a hinged fiberglass reinforced access door. Minimum dimensions of the door shall be 36 inches wide by 78 inches high for access by maintenance personnel to station interior. Door shall be a minimum 1 7/8 inch thick and shall be hinged with a minimum of two heavy duty stainless steel hinges to the enclosure cover. Door shall be furnished with a padlockable handle connected to a latching mechanism. Latch shall engage door casing or maximum security against vandalism. All mounting hardware for door casing and door must be concealed or of such type as to prevent vandalism with ordinary tools.

K. Removable panels shall be supplied on two sides of the enclosure for additional access to equipment. Location and size shall permit access for routine maintenance functions such as pump and motor inspection, drive belt adjustment, and pump clean-out. Non-hinged panels shall be secured with stainless steel tamper-proof hardware

L. A duplex ground fault indicating utility receptacle providing 115 volts, single phase, 60 hertz shall be mounted inside the pump station. Receptacle shall be NEMA 5-15r configuration, heavy duty, specification grade and fitted with a weatherproof cover. The receptacle shall be protected by normal duty circuit breaker.

M. A shuttered exhaust fan with a minimum capacity of 500 CFM to change the air in the enclosure once every minute, shall be mounted in the end wall approximately opposite the hinged door opening. An air intake vent shall be mounted in the hinged door assembly. Both

© 2012 City of Franklin, Tennessee. All rights reserved.

intake and exhaust opening shall be equipped with a screen and cowl suitably designed to prevent the entrance of rain, snow, rocks, and other foreign material. The thermostatically controlled exhaust fan shall energize automatically at approximately 70 degrees F, and turned off at 55 degrees F. Fan circuit shall be protected by a normal duty circuit breaker.

N. Two enclosed and gasketed 80 watt fluorescent light fixtures shall be provided. The fixtures shall be NEMA 4, suitable for wet location. The fixtures shall be located to provide adequate light to all parts of the station and shall not constitute a physical hazard to inspection or service personnel. Light circuit shall be protected by a normal duty circuit breaker and shall be provided with a disconnect switch.

O. Station Heater:
1. A 4 KW three-phase wall mounted forced air heater shall be provided for protection of the pump station equipment. The heater shall maintain an inside/outside temperature differential of 60 degrees F while operating on the primary electrical power available to the station. The heater shall be controlled by a thermostat and contactor and protected by a heavy duty circuit breaker.

P. Door Open Notification
1. The station enclosure shall include limit switches with defeater switch alarm circuit and time delay, mounted and wired in the station enclosure to indicate that there has been a door left open or unauthorized entry to the station. There shall be an adjustable time period for the operator to disable alarm with an unmarked pushbutton located inside the station. The notification shall be activated when a station door or access panel is opened. Includes dry contacts pre-wired to a terminal strip for remote monitoring.

2.6 PUMPS

A. Pump shall be horizontal, self-priming centrifugal type, designed specifically for handling raw unscreened domestic sanitary sewage or industrial waste. Pump solids handling capability and performance criteria shall be in accordance with requirements listed under PART 1 - GENERAL of this Section.

B. The pump manufacturer must be ISO 9001:2000 revision certified, with scope of registration including design control and service after sales activities.

C. Materials and Construction Features
1. Pump casing shall be cast iron Class 30 with integral volute scroll. Casing shall incorporate following features:
   a. Mounting feet sized to prevent tipping or binding when pump is completely disassembled for maintenance.
   b. Fill port cover plate, 3 1/2" diameter, shall be opened after loosening a positive lock clamp bar assembly. In consideration for safety, capscrew threads must provide slow release of pressure, and the clamp bar shall be retained by detente lugs. A non-metallic gasket shall prevent adhesion of the fill port cover to the casing while assuring a reliable seal.
   c. Casing drain plug shall be at least 1 1/4" NPT to insure complete and rapid draining.
   d. Liquid volume and recirculation port design shall be consistent with performance criteria listed under PART 1 - GENERAL of this Section.

© 2012 City of Franklin, Tennessee. All rights reserved.

2. Cover plate shall be cast iron Class 30. Design must incorporate the following maintenance features:
   a. Retained by hand nuts for complete access to pump interior. Coverplate removal must provide ample clearance for removal of stoppages, and allow service to the impeller, seal, wearplate or check valve without removing suction or discharge piping.
   b. A replaceable wearplate secured to the cover plate by weld studs and nuts shall be AISI 1015 HRS. Wearplate shall be self-cleaning design ensuring that debris is cleared away and does not collect on the impeller vanes.
   c. In consideration for safety, a pressure relief valve shall be supplied in the cover plate. Relief valve shall open at 75-200 psi.
   d. Two O-rings of Buna-N material shall seal cover plate to pump casing.
   e. Pusher bolt capability to assist in removal of cover plate. Pusher bolt threaded holes shall be sized to accept same retaining capscrews as used in rotating assembly.
   f. Easy-grip handle shall be mounted to face of cover plate.
3. Rotating assembly, which includes impeller, shaft, mechanical shaft seal, lip seals, bearings, seal plate and bearing housing, must be removable as a single unit without disturbing the pump casing or piping. Design shall incorporate the following features:
   a. Seal plate and bearing housing shall be cast iron Class 30. Anti-rotation ribs shall be cast into the sealplate to reduce internal wear and maximize component life. Separate oil filled cavities, vented to atmosphere, shall be provided for shaft seal and bearings. Cavities must be cooled by the liquid pumped. Three lip seals will prevent leakage of oil.
      1) The bearing cavity shall have an oil level sight gauge and fill plug check valve. The clear sight gauge shall provide easy monitoring of the bearing cavity oil level and condition of oil without removal of the fill plug check valve. The check valve shall vent the cavity but prevent introduction of moist air to the bearings.
      2) The seal cavity shall have an oil level sight gauge and fill/vent plug. The clear sight gauge shall provide easy monitoring of the seal cavity oil level and condition of oil without removal of the fill/vent plug.
      3) Double lip seal shall provide an atmospheric path providing positive protection of bearings, with capability for external drainage monitoring.
   b. Impeller shall be ductile iron, two vane, semi-open, non-clog, with integral pump out vanes on the back shroud. Impeller shall be statically or dynamically balanced. Impeller shall thread onto the pump shaft and be secured with a lockscrew and conical washer.
   c. Shaft shall be AISI 4140 alloy steel unless otherwise specified by the Owner, in which case AISI 17-4 pH stainless steel shall be supplied.
   d. Bearings shall be anti-friction ball type of proper size and design to withstand all radial and thrust loads expected during normal operation. Bearings shall be oil lubricated from a dedicated reservoir. Pump designs which use the same oil to lubricate the bearings and shaft seal shall not be acceptable.
   e. Shaft seal shall be oil lubricated mechanical type. The stationary and rotating seal faces shall be silicon carbide alloy. Each mating surface shall be lapped to within three light bands flatness (35 millionths of an inch), as measured by an optical flat under monochromatic light. The stationary seal seat shall be double floating by virtue of a dual O-ring design. An external O-ring secures the stationary seat to the sealplate, and an internal O-ring holds the faces in alignment during

© 2012 City of Franklin, Tennessee. All rights reserved.

periods of mechanical or hydraulic shock (loads which cause shaft deflection, vibration, and axial/radial movement). Elastomers shall be viton; cage and spring to be stainless steel. Seal shall be oil lubricated from a dedicated reservoir. The same oil shall not lubricate both shaft seal and shaft bearings. Seal shall be warranted in accordance with requirements listed under PART 1 - GENERAL of this Section.

f. Pusher bolt capability to assist in removal of rotating assembly. Pusher bolt threaded holes shall be sized to accept same capscrews as used for retaining rotating assembly.

4. Adjustment of the impeller face clearance (distance between impeller and wearplate) shall be accomplished by external means.
   a. Clearances shall be maintained by a four point external shimless cover plate adjustment system, utilizing a four collar and four adjusting screw design allowing for incremental adjustment of clearances by hand as required. Each of the four points shall be lockable to prevent inadvertent clearance increases or decreases due to equipment vibration or accidental operator contact. The four point system also allows for equal clearance gaps at all points between the impeller and wear plate. Requirement of realignment of belts, couplings, etc., shall not be acceptable. Coverplate shall be capable of being removed without disturbing clearance settings. Clearance adjustment systems that utilize less than four points will not be considered.
   b. There shall be provisions for additional clearance adjustment in the event that adjustment tolerances have been depleted from the cover plate side of the pump. The removal of stainless steel tabbed spacers from the rotating assembly side of the pump shall allow for further adjustment as described above.
   c. Clearance adjustment which requires movement of the shaft only, thereby adversely affecting seal working length or impeller back clearance, shall not be acceptable.
5. An externally removable suction check valve shall be molded Neoprene with integral steel and nylon reinforcement. A blow-out center shall protect pump casing from hydraulic shock or excessive pressure. Removal or installation of the check valve must be accomplished from the top of pump without disturbing the suction piping or completely draining the casing. Sole function of check valve shall be to save energy by eliminating need to reprime after each pumping cycle. Pumps requiring a suction check valve to assist reprime will not be acceptable.
6. Pump shall include flange kit consisting of two ASA spool flanges that shall be one piece cast iron class 30 suitable for attachment to suction and discharge ports. Each spool shall have one 1-1/4" NPT and one 1/4" NPT tapped hole with pipe plugs for mounting gauges or other equipment.

D. Serviceability:
1. The pump manufacturer shall demonstrate to the Owner's satisfaction that consideration has been given to reducing maintenance costs.
2. No special tools shall be required for replacement of any components within the pump.

E. Drain Kit:
1. Pumps to be supplied with a drain kit for ease of maintenance. The kit to contain 10' length of reinforced plastic hose with a female quick connect fitting at one end, and factory installed drain fittings in each pump. Fittings include a stainless steel pipe nipple, stainless steel bushing, stainless steel ball valve and aluminum male quick connect fitting.

© 2012 City of Franklin, Tennessee. All rights reserved.

F. Spare Parts Kit:
   1. The following minimum spare parts shall be furnished with the pump station:
      a. One spare pump mechanical seal (complete with shaft sleeve)
      b. One cover plate O-Ring
      c. One rotating assembly O-Ring
      d. One set of rotating assembly spacers

2.7 VALVES AND PIPING

A. Each pump shall be equipped with full flow type check valve capable of passing a 3" spherical solid. Valve shall be constructed with flanged ends and fitted with an external lever and torsional spring. Valve seat shall be constructed of stainless steel, secured to the body to ensure concentricity, sealed by an O-ring, and shall be replaceable. The valve body shall be cast iron incorporating a clean-out port large enough to allow removal and/or replacement of valve clapper without removing valve or piping from the line. Valve clapper shall have a molded Buna seating surface incorporating low pressure sealing rings. Valve hinge pin and internal hinge arm shall be stainless steel supported on each end in brass bushings. Shaft nut shall have double O-rings which shall be easily replaceable without requiring access to interior of valve body. All internal hardware shall be stainless steel. Valve shall be rated at 175 psi water working pressure, 350 psi hydrostatic test pressure. Valves other than full flow type or valves mounted in such a manner that prevents the passage of a 3" spherical solid shall not be acceptable.

B. Plug valves shall be of the non-lubricated, tapered type. Valve body shall be semi-steel with flanged end connection drilled to ANSI 125 lb. Standard. Valves shall have ports designed to pass spherical solids equal to the pumps capability. Valves shall be furnished with a drip-tight shutoff plug mounted in stainless steel or Teflon over phenolic bearings, and shall have a resilient facing bonded to the sealing surface.

C. Automatic Air Release Valves
   1. Each pump shall be equipped with an automatic air release valve designed to vent air to atmosphere during initial priming or unattended repriming cycles. Upon completion of the priming or repriming cycle, the valve shall automatically close operating solely on discharge pressure to prevent excess recirculation. A visible indication of valve closure shall be evident. Valves which connect to the suction line or rely on vacuum pumps shall not acceptable.
   2. The air release valve shall be constructed of UV-inhibiting, high impact composite polyester containing not less than 30% glass-filler. The valve body shall incorporate an internal passageway that allows all debris to pass through the valve chamber between operational cycles, thus making the valve self-cleaning upon sequential cycles. The valve diaphragms shall be Buna-N, Fluorocarbon or EPDM, and shall incorporate a polyester mesh sufficient to withstand 250 psi of pressure. Diaphragm materials of lesser-rated durability will not be deemed equal.
   3. The vertical valve plunger shall be constructed of Acetal and at least 20% PTFE fluorocarbon filler (DuPont Teflon or equivalent). The independent, dual diaphragms and single, vertical valve plunger shall incorporate a media fluid that passes through an orifice and separates the actions of each. This media fluid will impart sufficient energy for each diaphragm to act on the other to cause a metered stroke, allowing for predictable mechanical movement, thus opening and closing the valve smoothly, preventing chatter and harsh ramming forces. Valves with a single horizontal shaft or that do not incorporate straight-through passageways or media-limiting orifices will not be acceptable. The valve "seat" shall permit a prescribed bypass of the liquid being

© 2012 City of Franklin, Tennessee. All rights reserved.

pumped to ensure that the valve does not become hydraulically locked in submerged discharge piping configurations.

4. The valve shall employ an externally-adjustable restrictor for applications below four feet of static discharge head. Valves having no means to accurately adjust their action, or which require spring selection and lubrication are unacceptable. Being mechanically maintenance-free, provisions for clearing debris in the internal passageway normally associated with valves of this type are incorporated in the valve design and are accessible with only normal hand tools.
5. The valve body shall incorporate passageways having minimal constrictions and no directional course changes integral to the body of the valve. The inlet shall be 1 inch NPT female and the discharge outlet shall be 1-1/4 inch NPT female, assuring that any debris that makes its way through the valve body will have unobstructed passage back to the source. Valves having smaller throughput, bends or turns that restrict or impede flow and create pockets or traps for debris shall not be acceptable. The valve shall be mounted horizontally, 90 degrees to the vertical plunger by means of an integral mounting bracket.
6. The valve shall be able to operate on applications ranging from four to 400 feet of water column without the need for adjustment or interchange of springs or other parts.
7. Connection of the air release valves to pump station piping shall include stainless steel fittings.

D. Gauge Kit:

1. A gauge kit shall be supplied for each pump. Suction pressure must be monitored by a glycerin-filled compound gauge, and discharge pressure by a glycerin-filled pressure gauge. Gauges to be at least 4 inches in diameter, graduated in feet water column. Rated accuracy shall be 1% of full scale reading. Compound gauge shall be graduated -34 to +34 feet water column minimum. Pressure gauge to be graduated 0 to 140 feet water column minimum.
2. Gauges to be factory mounted on a resilient panel with frame assembly secured to pumps or piping. Gauge installations shall be complete with all hoses and stainless steel fittings, including a shutoff valve for each gauge line at the point of connection to suction and discharge pipes.

E. Piping:

1. Flanged header pipe shall be centrifugally cast, ductile iron, complying with ANSI/AWWA A21.51/C115 and class 53 thickness.
2. Flanges shall be cast iron class 125 and Comply with ANSI B16.1.
3. Pipe and flanges shall be threaded and suitable thread sealant applied before assembling flange to pipe.
4. Bolt holes shall be in angular alignment within 1/2o between flanges. Flanges shall be faced with a gasket finish.

F. Contractor must ensure all pipes connected to the pump station are supported to prevent piping loads from being transmitted to pumps or station piping. Pump station discharge force main piping shall be anchored with thrust blocks where shown on the contract drawings.

G. Portable Pump Discharge Connection:

1. The station header pipe shall incorporate a 2-way plug valve to permit emergency access to the pump station force main after isolation of the pumps. Valve body shall be cast iron with flanged end connections drilled to 125 pound standard. The plug valve shall be non-lubricated type, furnished with a drip-tight shutoff plug mounted in

© 2012 City of Franklin, Tennessee. All rights reserved.

stainless steel or Teflon over phenolic bearings, and shall have a resilient facing bonded to the sealing surface.

2. The bypass connection shall be accessible behind the hinged access panel on the wet well side of the station enclosure and shall terminate with a male OPW type quick connect fitting.

2.8 DRIVE UNIT

A. Motors (Note: Maximum motor frame size is 405T open drip-proof.)

1. Pump motors shall be TBD HP, 3 phase, 60 hertz, 460 VAC, horizontal ODP, 1,800 RPM, NEMA design B with cast iron frame with copper windings, induction type, with Class F insulation and 1.15 service factor for normal starting torque and low starting current characteristics, suitable for continuous service. The motors shall not overload at the design condition or at any head in the operating range as specified.
2. Motors shall be tested in accordance with provisions of ANSI/IEEE Std 112.

2.9 DRIVE TRANSMISSION

A. Power to pumps shall be transmitted through V-belt drive assemblies. The sheave/belt combination shall provide the speed ratio needed to achieve the specified pump operating conditions.

B. Each drive assembly shall utilize at least two V-belts providing minimum a combined safety factor of 1.5. Single belt drives or systems with a safety factor of less than 1.5 are not acceptable. Computation of safety factors shall be based on performance data published by the drive manufacturer.

C. Precise alignment tolerances of the drive assemblies shall be achieved by means of a belt/sheave laser alignment system resulting in the reduction of vibration, accelerated wear, and premature failure.

D. The pump manufacturer shall submit power transmission calculations which document the following:

1. Ratio of pump/motor speed.
2. Pitch diameter of driver and driven sheaves.
3. Number of belts required per drive.
4. Theoretical horsepower transmitted per belt, based on vendor's data.
5. Center distance between pump and motor shafts.
6. Arc-length correction factor applied to theoretical horsepower transmitted.
7. Service factor applied to established design horsepower.
8. Safety factor ratio of power transmitted/brake horsepower required.

E. Pump drives to be enclosed on all sides by a guard constructed of fabricated steel or combination of materials including expanded, perforated, or solid sheet metal. No opening to a rotating member shall exceed 1/2 inch.

1. Guards must be completely removable without interference from any unit component, and shall be securely fastened and braced to the unit base.
2. Metal to be free from burrs and sharp edges. Structural joints shall be continuously welded. Rivet spacing on panels shall not exceed five inches. Tack welds shall not exceed four inch spacing.

© 2012 City of Franklin, Tennessee. All rights reserved.

3. The guard shall be finished in accordance with Section 3, Color Definitions of ANSI 253.1; Safety Color Code for Marking Physical Hazards.

2.10 CORROSION PROTECTION

A. Pumps, piping, and exposed steel framework shall be cleaned prior to painting. Exposed surfaces to be coated with one coat gray W.R. non-lift primer and one coat white acrylic alkyd W.R. enamel. Paint shall be low VOC, alkyd based, high solids, semi-gloss white enamel for optimum illumination enhancement, incorporating rust inhibitive additives. The finish coat shall be 1.0 to 1.2 MIL dry film thickness (minimum), resistant to oil mist exposure, solvent contact, and salt spray. The factory finish shall allow for over-coating and touch up after final installation.

2.11 ELECTRICAL CONTROL COMPONENTS

A. The pump station control panel will be tested as an integral unit by the pump station manufacturer. The control panel shall also be tested with the pump station as a complete working system at the pump station manufacturer's facility.

B. Panel Enclosure:
   1. Electrical control equipment shall be mounted within a common NEMA 1 stainless steel, dead front type control enclosures. Doors shall be hinged and sealed with a neoprene gasket and equipped with captive closing hardware. Control components shall be mounted on removable steel back panels secured to enclosure with collar studs.
   2. All control devices and instruments shall be secured to the sub-plate with machine screws and lockwashers. Mounting holes shall be drilled and tapped; self-tapping screws shall not be used to mount any component. All control devices shall be clearly labeled to indicate function.

C. UL Label Requirement:
   1. Pump station components and controls shall conform to third party safety certification. The station shall bear a UL label listed for “Packaged Pumping System”. The panel shall bear a serialized UL label listed for "Enclosed Industrial Control Panels". The pump station components, panel enclosure, and all components mounted on the sub-panel or control cover shall conform to UL descriptions and procedures.

D. Branch Components:
   1. All Motor branch and power circuit components shall be of highest industrial quality. The short circuit current rating of all power circuit devices shall be a tested combination or evaluated per the National Electric Code Article 409. The lowest rated power circuit component shall be the overall control panel short circuit rating and shall not be less than the fault current available. The minimum control panel rating shall not be less than 10 kA, rms symmetrical. Control assemblies operating at 120 volts nominal or less may be provided with transformers which limit the fault current and may be rated less than the minimum required short circuit rating.
   2. Circuit Breakers and Operating Mechanisms:
      a. A properly sized heavy duty circuit breaker shall be furnished for each pump motor. The circuit breakers must be sealed by the manufacturer after calibration to prevent tampering.

© 2012 City of Franklin, Tennessee. All rights reserved.

b. An operating mechanism installed on each motor circuit breaker shall penetrate the control panel door. A padlockable operator handle shall be secured on the exterior surface. Interlocks must prevent opening the door until circuit breakers are in "OFF" position. An additional mechanism(s) shall be provided on the circuit breaker permitting the breaker to be operated and/or locked with the control panel door in the open position.

3. Motor Starters:
   a. An open frame, across-the-line, NEMA rated magnetic starter with under-voltage release, and overload protection on all three phases, shall be furnished for each pump motor. Starters of NEMA size 1 and above shall allow addition of at least two auxiliary contacts. Starters rated "0", "00", or fractional size are not acceptable. Power contacts to be double-break type made of cadmium oxide silver. Coils to be epoxy molded for protection from moisture and corrosive atmospheres. Contacts and coils shall be easily replaceable without removing the starter from its mounted position. Each starter shall have a metal mounting plate for durability.
   b. Overload relays shall be solid-state block type, having visual trip indication with trip-free operation. Electrically resetting the overload will cause one (1) normally open and one (1) normally closed isolated alarm/control contact to reset, thus re-establishing a control circuit. Trip setting shall be governed by solid-state circuitry and adjustable current setting. Trip classes shall be 10, 15 and 20. Additional features to include phase loss protection, selectable jam/stall protection and selectable ground fault protection.
   c. A reset pushbutton, mounted through the control panel door, shall permit resetting the overload relays without opening the door.
4. Phase Monitor:
   a. The control panel shall be equipped to monitor the incoming power and shut down the pump motors when required to protect the motor(s) from damage caused by phase reversal, phase loss, high voltage, low voltage, and voltage unbalance. An adjustable time delay shall be provided to minimize nuisance trips. The motor(s) shall automatically restart, following an adjustable time delay, when power conditions return to normal.

E. Transient Voltage Surge Suppressor
1. The control panel shall be equipped with a transient voltage surge suppressor to minimize damage to the pump motor and control from transient voltage surges. The suppressor shall utilize thermally protected silicon-oxide varistors encapsulated in a non-conductive housing. Mechanical indicators shall be provided on each phase to indicate protection has been lost. The suppressor shall have a surge current rating of 100,000 Amps per phase and a 100 kA interrupting rating.

F. Control Circuit:
1. A normal duty thermal-magnetic circuit breaker shall protect all control circuits by interrupting control power.
2. Pump mode selector switches shall permit manual start or stop of each pump individually, even if the controller is non-operational,or permit automatic operation under control of the liquid level control system. Manual operation shall override all shutdown systems, except the motor overload relays. Selector switches to be oil-tight design with contacts rated NEMA A300 minimum.
3. Pump alternation shall be integral to the liquid level controller. Provisions for automatic alternation or manual selection shall also be integral to the liquid level controller.

© 2012 City of Franklin, Tennessee. All rights reserved.

4. Six digit elapsed time meter (non-reset type) shall be connected to each motor starter to indicate total running time of each pump in "hours" and "tenths of hours". Separate pilot lights shall be provided to indicate which motor is energized and should be running.
5. A high pump temperature protection circuit shall override the level control and shut down the pump motor(s) when required to protect the pump from excessive temperature. A thermostat shall be mounted on each pump casing. If casing temperature rises to a level sufficient to cause pump damage, the high pump temperature protection circuit shall interrupt power to the pump motor. A visible indicator, mounted through the control panel door shall indicate motor stopped due to high pump temperature. The motor shall remain locked out until the pump has cooled and circuit has been manually reset. Automatic reset of this circuit is not acceptable.
6. A duplex ground fault receptacle providing 115 VAC, 60 Hz, single phase current, will be mounted on the side of the control enclosure. Receptacle circuit shall be protected by a 15 ampere thermal-magnetic circuit breaker.
7. The lift station shall be equipped with a 5 KVA step-down transformer to supply 115 volt, AC, single phase for the control and auxiliary equipment. The primary and secondary side of the transformer shall be protected by a thermal magnetic circuit breakers, sized to meet the power requirements of the transformer. An operating mechanism shall penetrate the control panel door and a padlockable operator handle shall be secured on the exterior surface. Interlocks must prevent opening the door until primary circuit breaker is in "OFF" position. An additional mechanism(s) shall be provided on the circuit breaker permitting the breaker to be operated and/or locked with the control panel door in the open position.
   a. Pump Start Delay:
      1) The control circuit for pump #2 shall be equipped with a time delay to prevent simultaneous motor starts.
8. Wiring:
   a. The pump station, as furnished by the manufacturer, shall be completely wired, except for power feed lines to the main entrance terminal blocks and final connections to remote alarm devices.
   b. All wiring, workmanship, and schematic wiring diagrams shall comply with applicable standards and specifications of the National Electric Code (NEC).
   c. All user serviceable wiring shall be type MTW or THW, 600 volts, color coded as follows:
      1) Line and Load Circuits, AC or DC power.....Black
      2) AC Control Circuit Less Than Line Voltage.....Red
      3) DC Control Circuit.....Blue
      4) Interlock Control Circuit, from External Source.....Yellow
      5) Equipment Grounding Conductor.....Green
      6) Current Carrying Ground.....White
      7) Hot With Circuit Breaker Open.....Orange
   d. Control circuit wiring inside the panel, with exception of internal wiring of individual components, shall be 16 gauge minimum, type MTW or THW, 600 volts. Power wiring to be 14 gauge minimum. Motor branch wiring shall be 10 gauge minimum.
   e. Motor branch and other power conductors shall not be loaded above the temperature of the connected termination. Wires must be clearly numbered at each end in conformance with applicable standards. All wire connectors in the control panel shall be ring tongue type with nylon insulated shanks. All wires on the sub-plate shall be bundled and tied. All wires extending from components

© 2012 City of Franklin, Tennessee. All rights reserved.

mounted on door shall terminate at a terminal block mounted on the back panel. All wiring outside the panel shall be routed through conduit.

f. Control wires connected to door mounted components must be tied and bundled in accordance with good commercial practice. Bundles shall be made flexible at the hinged side of the enclosure. Adequate length and flex shall allow the door to swing full open without undue stress or abrasion. Bundles shall be held on each side of hinge by mechanical fastening devices.

9. Factory installed conduit shall conform to following requirements:
   a. All conduit and fittings to be UL listed.
   b. Liquid tight flexible metal conduit to be constructed of smooth, flexible galvanized steel core with smooth abrasion resistant, liquid tight polyvinyl chloride cover.
   c. Conduit to be supported in accordance with articles 346, 347, and 350 of the National Electric Code.
   d. Conduit shall be sized according to the National Electric Code.
10. Grounding:
   a. Station manufacturer shall ground all electrical equipment inside the pump station to the control panel back plate. All paint must be removed from the grounding mounting surface before making final connection.
   b. The Contractor shall provide an earth driven ground connection to the pump station at the main grounding lug in accordance with the National Electric Code (NEC).
11. Equipment Marking:
   a. Permanent corrosion resistant name plate(s) shall be attached to the control and include following information:
      1) Equipment serial number
      2) Control panel short circuit rating
      3) Supply voltage, phase and frequency
      4) Current rating of the minimum main conductor
      5) Electrical wiring diagram number
      6) Motor horsepower and full load current
      7) Motor overload heater element
      8) Motor circuit breaker trip current rating
      9) Name and location of equipment manufacturer
   b. Control components shall be permanently marked using the same identification keys shown on the electrical diagram. Labels shall be mounted adjacent to device being identified.
   c. Switches, indicators, and instruments mounted through the control panel door shall be labeled to indicate function, position, etc. Labels shall be mounted adjacent to, or above the device.

2.12 LIQUID LEVEL CONTROL

A. The manufacturer of the liquid level control system must be ISO 9001:2000 revision certified, with scope of registration including design control and service after sales activities.

B. The level control system shall start and stop the pump motors in response to changes in wet well level, as set forth herein.

C. The level control system shall be capable of operating as either an air bubbler type level control system, submersible transducer type system, or ultrasonic transmitter type system.

© 2012 City of Franklin, Tennessee. All rights reserved.

D. The level control system shall utilize alternation to select first one pump, then the second pump, then the third pump (if required), to run as lead pump for a pumping cycle. Alternation shall occur at the end of a pumping cycle, or in the event of excessive run time.

E. The level control system shall utilize an electronic pressure switch which shall continuously monitor the wet well level, permitting the operator to read wet well level at any time. Upon operator selection of automatic operation, the electronic pressure switch shall start the motor for one pump when the liquid level in the wet well rises to the "lead pump start level". When the liquid is lowered to the "lead pump stop level", the electronic pressure switch shall stop this pump. These actions shall constitute one pumping cycle. Should the wet well level continue to rise, the electronic pressure switch shall start the second and/or third pump (if required) when the liquid reaches the "lag pump start level", or “standby pump start level” so that all pumps are operating. These levels shall be adjustable as described below.

1. The electronic pressure switch shall include integral components to perform all pressure sensing, signal conditioning, EMI and RFI suppression, DC power supply and 120 volt outputs. Comparators shall be solid state, and shall be integrated with other components to perform as described below.
2. The electronic pressure switch shall be capable of operating on a supply voltage from 12-24VDC in an ambient temperature range of -10 degrees C (14 degrees F) through 55 degrees C (131 degrees F). Control range shall be 0 to 12.0 feet of water with an overall repeat accuracy of (plus/minus) 0.1 feet of water. Memory shall be non-volatile.
3. The electronic pressure switch shall consist of the following integral components: pressure sensor, display, electronic comparators and output relays.
   a. The internal pressure sensor shall be a strain gauge transducer and shall receive an input pressure from the air bubbler system. The transducer shall convert the input to a proportional electrical signal for distribution to the display and electronic comparators. The transducer output shall be filtered to prevent control response to level pulsations or surges. The transducer range shall be 0-15 psi, temperature compensated from -40 degrees C (-40 degrees F) through 85 degrees C (185 degrees F), with a repeat accuracy of (plus/minus) 0.25% full scale about a fixed temperature. Transducer overpressure rating shall be 3 times full scale.
   b. The electronic pressure switch shall incorporate a digital back lighted LCD panel display which, upon operator selection, shall indicate liquid level in the wet well, and the preset start and stop level for both lead and lag pump. The display shall include twenty (20), 0.19" high alpha-numeric characters calibrated to read out directly in feet of water, accurate to within one-tenth foot (0.1 foot), with a full scale indication of not less than 12 feet. The display shall be easily convertible to indicate English or metric units.
   c. Level adjustments shall be electronic comparator set-points to control the levels at which the pumps start and stop. Each of the level settings shall be easily adjustable with the use of membrane type switches, and accessible to the operator without opening any cover panel on the electronic pressure switch. Controls shall be provided to permit the operator to read the selected levels on the display. Such adjustments shall not require hard wiring, the use of electronic test equipment, artificial level simulation or introduction of pressure to the electronic pressure switch.
   d. Each output relay in the electronic pressure switch shall be solid state. Each relay input shall be optically isolated from its output and shall incorporate zero crossover switching to provide high immunity to electrical noise. The "ON" state of each relay shall be indicated by illumination of a light emitting diode. The

© 2012 City of Franklin, Tennessee. All rights reserved.

output of each relay shall be individually fused providing overload and short circuit protection. Each output relay shall have an inductive load rating equivalent to one NEMA size 4 contactor. A pilot relay shall be incorporated for loads greater than a size 4 contactor.

4. The electronic pressure switch shall be equipped with an output board which shall include LED status indicators and a connector with cable for connection to the main unit.
5. The electronic pressure switch shall be equipped with pump start delay(s) preset at a fixed delay time of five (5) seconds.
6. Circuit design in which application of power to the lag pump motor starter is contingent upon completion of the lead pump circuit shall not be acceptable.
7. The electronic pressure switch shall be equipped with a simulator system capable of performing system cycle testing functions.
8. The electronic pressure switch shall have internal capability of providing automatic alternation, manual selection of pump sequence operation, and alternation in the event of 1-199 hours excessive run time.
9. The electronic pressure switch shall be equipped with a security access code to prevent accidental set-up changes and provide liquid level set-point lock-out.
10. The electronic pressure switch shall be equipped with one (1) 0-33 ft. W.C. input, one (1) scalable analog input of either 0-5VDC, 0-10VDC, or 4-20mA, and one (1) 4-20mA scalable output. Output is powered by 10-24VDC supply. Load resistance for 4-20mA output shall be 100-1000 ohms.
11. The electronic pressure switch shall include a DC power supply to convert 120VAC control power to 12 or 24VDC EPS power. The power supply shall be 500mA (6W) minimum and be UL listed Class II power limited power supply.
12. The electronic pressure switch shall be equipped with an electronic comparator and solid state output relay to alert maintenance personnel to a high liquid level in the wet well. An indicator, visible on the front of the control panel, shall indicate that a high wet well level exists. The alarm signal shall be maintained until the wet well level has been lowered and the circuit has been manually reset. High water alarm shall be furnished with a dry contact wired to terminal blocks.
13. The electronic pressure switch shall be equipped with an electronic comparator and solid state output relay to alert maintenance personnel to a low liquid level in the wet well. An indicator, visible on the front of the control panel, shall indicate that a low wet well level exists. The alarm signal shall be maintained until the cause for the low wet well level has been corrected and the circuit has been manually reset. A low liquid level condition shall disable both pump motors. When the wet well rises above the low level point, both pump motors shall be automatically enabled. Low water alarm shall be furnished with a dry contact wired to terminal blocks.
14. EPS Analog Output circuit will be furnished with transient voltage surge suppression to protect related equipment from induced voltage spike from lighting.

F. An alarm silence pushbutton and relay shall be provided to permit maintenance personnel to de-energize the audible alarm device while corrective actions are under way. After silencing the alarm device, manual reset of the alarm condition shall clear the alarm silence relay automatically. The pushbutton shall be oil tight design with contacts rated NEMA A300 minimum.

G. Air Bubbler System:

© 2012 City of Franklin, Tennessee. All rights reserved.

1. The level control system shall be the air bubbler type, containing air bubbler piping which extends into the wet well. A pressure sensor contained within the electronic pressure switch shall sense the air pressure in this piping to provide wet well level signals for the remainder of the level control system.
2. Two vibrating reed, industrial rated, air pumps shall be furnished to deliver free air at a rate of approximately 5 cubic feet per hour and a pressure not to exceed 7 psi. Liquid level control systems utilizing air compressors delivering greater quantities of air at higher pressures, requiring pressure reducing valves, air storage reservoirs, and other maintenance nuisance items will not be acceptable. A selector switch shall be furnished to provide manual alternation of the air pumps. The switch shall be connected in such a manner that either pump may be selected to operate continuously. The selector switch shall be oil-tight design with contacts rated NEMA A300 minimum.
3. An air bell constructed of PVC 3 inches in diameter shall be provided for installation at the outlet of the air bubbler line in the wet well. The air bell shall have a 3/8" NPT tapped fitting for connection to the bubbler line.
4. An air flow indicator gauge shall be provided and connected to the air bubbler piping to provide a visual indication of rate of flow in standard cubic feet per hour.

2.13 ALARM LIGHT (EXTERNAL)

A. Station manufacturer will supply one 115 VAC NEMA 4X alarm light fixture with red globe, conduit box, and mounting base. The design must prevent rain water from collecting in the gasketed area of the fixture, between the base and globe. The alarm light will be shipped loose for installation by the Contractor.

2.14 SPARE CIRCUIT BREAKERS

A. Station manufacturer will supply four (4) spare 20 amp, 115 volt circuit breakers designed to provide power to SCADA RTU and flow meter. two (2) circuit breakers will serve as spares.

2.15 SCADA RTU AND MASTER UPGRADE

A. The Contractor shall supply and install a SCADA RTU compatible with the Owner's existing system. The Contractor shall provide services to upgrade the existing Master to accept the new RTU including all programming, radio licensing, start up services, antennas and other accessories and services to allow monitoring of the pump station by the Owner.

2.16 FLOW METER

A. The Contractor shall supply and install a magnetic flow meter designed to provide instantaneous flow readout in GPM. Flow meter sensor shall be installed in external vault and loop powered. Remote readout shall be mounted and wired in pump station enclosure. Flow meter shall be Magnetoflow model as manufactured by Badger Meter.

2.17 GENERATOR RECEPTACLE AND MANUAL TRANSFER SWITCH

A. Contractor shall supply and install a manual transfer switch and generator connection compatible with the Owner's portable generator.

2.18 ONLINE INTERACTIVE O&M TRAINING PROGRAM

© 2012 City of Franklin, Tennessee. All rights reserved.

A. The pump station shall be supplied with an online interactive O&M training program. Program shall be approved for continuing education by the State of Tennessee and as provided by 360water, Inc.

PART 3 - EXECUTION

3.1 EXAMINATION

A. Contractor shall off-load equipment at installation site using equipment of sufficient size and design to prevent injury or damage. Station manufacturer shall provide written instruction for proper handling. Immediately after off-loading, Contractor shall inspect complete pump station and appurtenances for shipping damage or missing parts. Any damage or discrepancy shall be noted in written claim with shipper prior to accepting delivery. Validate all station serial numbers and parts lists with shipping documentation. Notify the manufacturer's representative of any unacceptable conditions noted with shipper.

3.2 INSTALLATION

A. Install, level, align, and lubricate pump station as indicated on project drawings. Installation must be in accordance with written instructions supplied by the manufacturer at time of delivery.

B. Suction pipe connections must be vacuum tight. Fasteners at all pipe connections must be tight. Install pipe with supports and thrust blocks to prevent strain and vibration on pump station piping. Install and secure all service lines (level control, air release valve or pump drain lines) as required in wet well.

C. Check motor and control data plates for compatibility to site voltage. Install and test the station ground prior to connecting line voltage to station control panel.

D. Prior to applying electrical power to any motors or control equipment, check all wiring for tight connection. Verify that protective devices (fuses and circuit breakers) conform to project design documents. Manually operate circuit breakers and switches to ensure operation without binding. Open all circuit breakers and disconnects before connecting utility power. Verify line voltage, phase sequence and ground before actual start-up.

E. After all anchor bolts, piping and control connections are installed, completely fill the grout dam in the pump station base with non-shrink grout.

3.3 FIELD QUALITY CONTROL

A. Operational Test:
   1. Prior to acceptance by Owner, an operational test of all pumps, drives, and control systems shall be conducted to determine if the installed equipment meets the purpose and intent of the specifications. Tests shall demonstrate that all equipment is electrically, mechanically, structurally, and otherwise acceptable; it is safe and in optimum working condition; and conforms to the specified operating characteristics.
   2. After construction debris and foreign material has been removed from the wet well, Contractor shall supply water volume adequate to operate station through several pumping cycles. Observe and record operation of pumps, suction and discharge gauge

© 2012 City of Franklin, Tennessee. All rights reserved.

readings, ampere draw, pump controls, and liquid level controls. Check calibration of all instrumentation equipment, test manual control devices, and automatic control systems.

B. Coordinate station start-up with manufacturer's technical representative. The representative or factory service technician will inspect the completed installation. The technician will calibrate and adjust instrumentation, correct or supervise correction of defects or malfunctions, and instruct operating personnel in proper operation and maintenance procedures.

C. Prior to acceptance, inspect interior and exterior of pump station for dirt, splashed material or damaged paint. Clean or repair accordingly. Remove from the job site all tools, surplus materials, scrap and debris.

D. The pump station should be placed into service immediately. If operation is delayed, station is to be stored and maintained per manufacturer's written instructions.

3.4 EARTHWORK

A. Excavation, trenching, and backfilling are specified in Division 31 Section "Earthwork."

3.5 IDENTIFICATION

A. Install identifying labels permanently attached to equipment.

B. Install operating instruction signs permanently attached to equipment or on pumping station wall near equipment.

3.6 CONNECTIONS

A. Sanitary sewer piping installation requirements are specified in Division 33 Section "Sanitary Sewer (Gravity)." Drawings indicate general arrangement of piping.

END OF SECTION

© 2012 City of Franklin, Tennessee. All rights reserved.

RECLAIMED WATER DISTRIBUTION PIPING
Section 33 3300

PART 1 - GENERAL

1.1 RELATED DOCUMENTS

A. Drawings and general provisions of the Contract, including General and Supplementary Conditions and other Division 01 Specification Sections, apply to this Section.

1.2 SUMMARY

A. This Section includes requirements for reclaimed water distribution piping.

B. Related Sections include the following:
1. Division 31 Earthwork Sections for excavation requirements.
2. Division 33 Section "Trenchless Installation of Utilities" for casing pipe requirements.

1.3 DEFINITIONS / STANDARDS

A. The following are industry abbreviations for metal and plastic materials:
1. PVC: Polyvinyl chloride plastic.
2. DIP: Ductile iron pipe.
3. HDPE: High-density polyethylene.

B. Reclaimed water distribution piping shall be PVC unless directed otherwise by the Owner.

C. Buried piping shall be of the bell and spigot, mechanical joint, butt fusion, and/or electrofusion type as required by material and application.

D. Non-buried piping shall have flanged ends, unless otherwise noted on the Drawings.

E. Use Mechanical Joint Fitting Restraining Device for plain end piping connections to fittings, valves, etc.

1.4 SUBMITTALS

A. Product Data:
1. Ductile iron pipe.
2. Ductile iron fittings.
3. Ductile iron flanged pipe.
4. Polyvinyl Chloride Plastic (PVC) Pipe.
5. High density polyethylene pipe.
6. High density polyethylene fittings.
7. Pipe insulation and accessories.
8. Mechanical joint restraint devices.
9. Flanged coupling adapters.
10. Flexible expansion joint.
11. Concrete vaults and accessories.
12. Line markers.
13. Utility warning tape.
14. Detection wire.

B. Shop Drawings:

© 2012 City of Franklin, Tennessee. All rights reserved.

1. Concrete vaults and manholes, including hatches, frames and covers, ladders, and drains.

C. Operation and Maintenance Data: For specialties to include in emergency, operation, and maintenance manuals.

1.5 QUALITY ASSURANCE

A. Product Options: Drawings indicate size, profiles, and dimensional requirements of piping and specialties and are based on the specific system indicated.

B. Comply with regulatory requirements of local, state and federal agencies having jurisdiction.

C. Piping material shall bear label, stamp, or other markings of specified testing agency.

D. Comply with ASTM F645 for selection, design, and installation of thermoplastic water piping.

E. Comply with NSF 61 for materials.

F. The pipe manufacturer must furnish the Owner a notarized certificate stating that the pipe furnished has been manufactured and tested in accordance with the applicable standards.

G. Polyvinyl chloride (PVC) pipe shall have proper markings which include manufacturer's name or trademark, nominal pipe size and size base, pressure rating for water at 73.4 degrees Fahrenheit, PVC cell classification or material code, dimension ratio or standard dimension ratio, AWWA or ASTM designation, pressure class with which the pipe complies, and the National Sanitation Foundation (NSF) Seal of Approval.

H. Coordinate this work with that required by other sections for timely execution.

I. It shall be the Contractor's responsibility to ensure that all necessary materials are furnished to them and that those found to be defective in manufacture are replaced at no extra cost to the Owner. Materials damaged in handling after being delivered by the manufacturer shall be replaced at the Contractor's own expense. If installed material is found to be defective before the final acceptance of the Work, the cost of both the material and labor needed to replace it shall not be passed on to the Owner.

J. Furnish all material, equipment, tools, and labor in connection with the reclaimed water distribution piping, complete and in accordance with the drawings and these specifications.

1.6 PRODUCT DELIVERY, STORAGE, AND HANDLING

A. Delivery: Deliver piping with factory-applied end caps. Maintain end caps through shipping, storage, and handling to prevent pipe-end damage and to prevent entrance of dirt, debris, and moisture.

B. Storage:
   1. The Contractor shall be responsible for safely storing materials needed for the Work that have been accepted by them until they have been incorporated into the completed project.

© 2012 City of Franklin, Tennessee. All rights reserved.

2. Protect stored piping from moisture and dirt. Elevate above grade. Do not exceed structural capacity of floor when storing inside.
3. Store plastic piping protected from direct sunlight. Support to prevent sagging and bending.

C. Handling: Protect flanges, fittings, and specialties from moisture and dirt.

1.7 GENERAL REQUIREMENTS

A. The minimum pipe size for reclaimed water main lines is 4 inches.

B. When a reclaimed water line is to be parallel to a wastewater line there shall be a minimum of 5 feet measured edge to edge between the two lines.

If this cannot be achieved, the bottom of the reclaimed water line shall be at least 18 inches above the top of the wastewater line.

If neither condition can be met, the wastewater line shall be constructed of similar materials and have a joint design equivalent to the reclaimed water line and shall be pressure tested to 200 psi to assure watertightness.

C. When a reclaimed water line is to be parallel to a water line there shall be a minimum of 10 feet measured edge to edge between the two lines.

If this cannot be achieved, the top of the reclaimed water line shall be 18 inches below water line.

The reclaimed water line shall always be located below water lines and above wastewater lines.

D. The reclaimed water system shall be separate and independent of any water system. Cross connections are prohibited.

E. Water and reclaimed water lines are not to be installed in the same trench..

F. Where reclaimed water lines are installed in new fill, a compaction letter sealed by a Geotechnical Engineer registered in the State of Tennessee shall be submitted to the Owner prior to accepting said utilities. An acceptable compaction letter shall state that field density testing indicates the fill has been compacted to at least 95% of the maximum dry density according to the Standard Proctor. If a compaction letter is not available, special protection such as replacement with ductile iron pipe with joint restraint or encasement with flowable fill shall be utilized as approved by the WMD.

PART 2 - PRODUCTS

2.1 DUCTILE IRON PIPE

A. Ductile iron pipe shall conform to the requirements of ANSI 21.151/AWWA C151 latest revision for ductile iron pipe centrifugally cast in metal or sand-lined molds. It shall be made

© 2012 City of Franklin, Tennessee. All rights reserved.

and tested in accordance with ASTM A536, latest revision. The pipe shall be able to withstand a hydrostatic pressure of 500 psi. It shall be painted or wrapped in some type of polyethylene sleeve colored purple.

B. The design thickness shall be that specified by ANSI A21.50/AWWA C150 latest revision except that all pipe with a diameter of 12 inches or less shall be Pressure Class 350 and all pipe with a diameter 14 inches or greater shall be Pressure Class 300 unless determined otherwise by the Owner or Engineer.

C. Coatings and Lining: Pipe shall be lined with thin cement as specified in ANSI A21.4/AWWA C104. In addition, an asphaltic coat approximately 1 mil thick shall be applied to the cement lining in accordance with the pipe manufacturer's standard practices. The outside coating shall be an asphaltic coating approximately 1 mil thick in accordance with ANSI A21.51/AWWA C151.

D. The bell of each pipe shall have a tapered annular opening and a cast or machined retaining groove for the gasket. The gasket shall have a flared design so that maximum deflection will be provided. The plain spigot end of the pipe shall be beveled in order to simplify its entry into and centering within the bell and compression of the gasket.

E. Gaskets:
1. Gaskets shall be Styrene Butadiene Copolymer (SBR) or Ethylene Propylene Diene Monomer (EPDM) in accordance with ANSI A21.11/AWWA C111, latest revision made in the form of a solid ring to exact dimensions.
   a. Push-on Joint Gaskets: The design of the gasket groove in the bell of the pipe and the design, hardness, and other properties of the gasket itself shall be such that the joint is liquid tight for all pressures from a vacuum to a maximum rating of 350 psi of internal liquid pressures. Gaskets for pipe with an operating pressure greater than 160 psi shall be restrained joint gaskets.
      1) Manufacturer / Model:
         a) American Ductile Iron Pipe "Fastite,"
         b) U.S. Pipe "Tyton," or
         c) Approved equal.
   b. Push-on Restrained Joint Gaskets: Restrained pipe and fittings are as shown on the Drawings. Retainer glands and similar devices will not be allowed unless otherwise noted or shown on the Drawings or approved by the Owner. Push-on joint restraint shall be incorporated in the design of the pipe bell and gasket. The restraint shall be provided by the wedging action developed between pairs of hardened high-strength, stainless steel elements spaced around the gasket. The push-on restrained joint shall be rated for 250 psi working pressure.
      1) Manufacturer / Model:
         a) American Ductile Iron Pipe "Fast-Grip" (for pipe sizes 24-inch and less),
         b) U.S. Pipe "Field Lok" Gaskets (for pipe sizes 24-inch and less),
         c) American Ductile Iron Pipe "Flex-Ring" (for pipe sizes 30 and 36 inch),
         d) American Ductile Iron Pipe "Lok-Ring" (for pipe sizes greater than 46 inches),
         e) U.S. Pipe "TR Flex" (for pipe sizes 24-inch and larger), or
         f) Approved equal.

© 2012 City of Franklin, Tennessee. All rights reserved.

2. Lubricant: Lubricant shall be furnished with each order to provide for the proper installation of the pipe supplied with said order. This lubricant shall be nontoxic, impart no taste or smell to the water, and have no harmful effect on the rubber gasket. It shall have a consistency that will allow it to be easily applied to the pipe in either hot or cold weather and that will enable it to adhere to either wet or dry pipe.

F. Manufacturer:
1. American Cast Iron Pipe Company,
2. Griffin Pipe Products,
3. McWane,
4. U.S. Pipe, or
5. Approved equal.

2.2 DUCTILE IRON FITTINGS

A. Standard and special fittings shall be Pressure Class 350 ductile iron. Use standard mechanical joint fittings or anchoring tees at hydrant locations. All fittings shall conform to the specifications of ANSI A21.10/AWWA C110 (Full Body) or ANSI A21.53/AWWA C153 (Compact), latest revisions.

B. All buried fittings shall be mechanical joint with a restrained joint gland. Non-buried fittings shall be flanged unless otherwise shown on Drawings or directed by the Owner. Where flanged pipe is shown, no substitution of a Uni-Flange type joint will be used without prior approval of the Owner. Where push-on joint fittings are used, the fittings must be rodded to an anchor (i.e. dead-man, valve, etc.), have a mechanical joint fitting restraining device, or push-on restrained joint gasket. Use anchor tees or joint restraint device at hydrant locations.

C. Coatings and Lining: Fittings shall be lined with cement as specified in ANSI A21.4/AWWA C104. In addition, an asphaltic coat approximately 1 mil thick shall be applied to the cement lining in accordance with the pipe manufacturer's standard practices. The outside coating shall be an asphaltic coating approximately 1 mil thick in accordance with ANSI A21.51/AWWA C151. Ductile iron pipe will need to be painted or wrapped in some type of polyethylene sleeve colored purple.

D. Manufacturer:
1. Tyler/Union
2. American Cast Iron Pipe Company
3. U.S. Pipe and Foundry

2.3 DUCTILE IRON FLANGED PIPE

A. Flanged pipe shall meet the requirements of ductile iron pipe, as specified herein, unless otherwise specified. All pipe shall be painted or wrapped in some type of polyethylene sleeve colored purple.

B. All ductile iron flanged pipe shall comply with ANSI A21.15/AWWA C115, latest revision. The pipe barrel shall be manufactured in accordance with ANSI A21.51/AWWA C151, latest revision. All flanges shall be ductile iron and rated for 250 psi working pressure. To insure accountability, all flanged pipe shall be fabricated at the factory by the barrel manufacturer. All flanges (unless otherwise indicated or required) shall be faced and drilled ANSI B16.1 125-pound for ductile iron and ANSI B16.5 150-pound for steel.

© 2012 City of Franklin, Tennessee. All rights reserved.

C. Provide a flanged pipe gasket for each joint made of Styrene Butadiene Copolymer (SBR) or Ethylene Propylene Diene Monomer (EPDM) which meet all the material requirements of ANSI A21.11/AWWA C111.

D. Gaskets for flanged pipe with an operating pressure greater than 160 psi shall be Toruseal Flange Gasket as manufactured by American Cast Iron Pipe Company, American Ductile Iron Pipe Division, or approved equal.

E. Manufacturer:
   1. U.S. Pipe
   2. American Cast Iron Pipe Company
   3. Approved equal

2.4 POLYVINYL CHLORIDE PLASTIC (PVC) PIPE

A. PVC plastic pipe shall conform to the latest edition of ASTM Specification – D2241, AWWA C900, and/or AWWA C905, as appropriate; Standard Dimension Ratios (SDR); Maximum Length – 20 feet. PVC Pipe, 3 inches and smaller shall conform to the latest edition of ASTM D 1785 Schedule 80 with solvent weld joints.

B. Joints on pipe larger than 3-inches shall be integral bell and spigot type joints conforming to ASTM D-3139. Elastomeric gasket shall conform to the requirements of ASTM F-477. Gaskets shall be part of a complete pipe section and purchased as such. Lubricant shall be as recommended by the pipe or fitting manufacturer and shall not adversely affect the potable qualities of the water to be transported.

C. PVC pipe meeting ASTM D2241 specification shall have the following pressure ratings unless specified otherwise (SDR 21 recommended):

SDR	Pressure Rating (psi)	Maximum Allowable Pressure Use (psi)
21	200	135
17	250	180
13.5	315	240

D. PVC pipe meeting C900 and C905 standards shall have the following pressure ratings unless specified otherwise (DR 25 Recommended):

DR	Pressure Rating (psi)	Maximum Allowable Pressure Use (psi)
25	165	100
18	235	165
14	305	230

E. All new buried reclaimed water pipe shall be colored purple, Pantone® 522C or equivalent.

F. Manufacturer:
   1. Diamond,

© 2012 City of Franklin, Tennessee. All rights reserved.

2. Vulcan Plastic Corporation,
3. North American Pipe Corporation, or
4. Approved equal

2.5 HIGH DENSITY POLYETHYLENE PIPE

A. Pipe shall be manufactured from a PE 3408/3608 resin listed with the Plastic Pipe Institute (PPI) as TR-4. The resin material will meet the specifications of ASTM D3350 with a cell classification of PE:345464E. Pipe shall have a manufacturing standard of ASTM F714. Pipe O.D. size shall be ductile iron pipe sizes (DIPS). Pipe shall have a 1600 psi Hydrostatic Design Basis & an 800 psi Hydrostatic Design Stress. The pipe shall contain no recycled compounds except that generated in the manufacturer's own plant from resin of the same specification from the same raw material. All pipes shall be suitable for use as pressure conduits, listed as NSF 61, and per AWWA C906 (4”-12” pipe) and AWWA C901 (1/2”-3” pipe).

B. Manufacturer:
1. Charter Plastics
2. Approved Equal

2.6 HIGH DENSITY POLYETHYLENE FITTINGS

A. Butt Fusion Fittings: Shall be PE3408 HDPE, Cell Classification of 345464C as determined by ASTM D3350-02, and approved for AWWA use. Butt Fusion Fittings shall have a manufacturing standard of ASTM D3261. Molded and fabricated fittings shall have a pressure rating equal to the pipe unless otherwise specified in the drawings. Fabricated fittings are to be manufactured using Data Loggers. Temperature, fusion pressure, and a graphic representation of the fusion cycle shall be part of the quality control records. All fittings shall be suitable for use as pressure conduits, and per AWWA C906, have nominal burst values of three and one-half times the Working Pressure Rating (WPR) of the fitting.

B. Electrofusion Fittings: Shall be PE3408 HDPE, Cell Classification of 345464C as determined by ASTM 3350-02. Electrofusion fittings shall have a manufacturing standard of ASTM F1055. Fittings shall have a pressure rating equal to the pipe unless otherwise specified on the plans. All electrofusion fittings shall be suitable for use as pressure conduits, and per AWWA C906, have nominal burst values of three and one-half times the Working Pressure Rating (WPR) of the fitting. All electrofusion couplings and fittings must use a 3-pin fusion system.

C. Flanged and Mechanical Joint Adapters: Shall be PE 3408 HDPE, Cell Classification of 345464C as determined by ASTM D3350-02. Flanged and mechanical joint adapters shall have a manufacturing standard of ASTM D3261. Fittings shall have a pressure rating equal to the pipe.

2.7 PIPE INSULATION AND ACCESSORIES

A. Pipe Insulation:
1. Pipe insulation shall be polyisocyanurate foam insulation and meet the requirements of ASTM-C591. Insulation shall have a maximum thermal conductivity of 0.19 BTU-in/hr-ft^2-^{o}F at a mean temperature of 75°F and 180 days aging.

© 2012 City of Franklin, Tennessee. All rights reserved.

2. Manufacturer / Model:
   a. Pittsburg-Corning,
   b. Trymer 2000, or
   c. Approved equal.

B. Aluminum Roll Jacketing:
1. Jacketing is to be manufactured from aluminum alloy conforming to ASTM B209 designation with 3/16 inch corrugated surface. Minimum thickness shall be 0.010 inch. All jacketing shall have an integrally bonded moisture barrier over the entire surface in contact with the insulation. Overlap jacketing 2 inch minimum at butt joints.
2. Manufacturer / Model:
   a. Childers, or
   b. Approved equal.

C. Fastening Devices:
1. All insulation and jacketing shall be secured using a 1/2 inch wide aluminum strapping conforming to ASTM-B209. Strapping shall be 0.020 inch thick and installed on 12 inch centers.
2. Manufacturer / Model:
   a. Childers, or
   b. Approved equal.

2.8 MECHANICAL JOINT FITTING RESTRAINT DEVICES

A. Ductile Iron Pipe Restraint Devices:
1. Restraint devices for nominal pipe sizes 3 inch through 48 inch shall consist of multiple gripping wedges incorporated into a follower gland meeting the applicable requirements of ANSI/AWWA C110/A21.10. Restraint device shall have torque limiting twist-off nuts.
2. Restraint devices shall have a working pressure rating of 350 psi for 3 through16 inch and 250 psi for 18 through 48 inch. Ratings are for water pressure and must include a minimum safety factor of 2 to 1 in all sizes.
3. Gland body, wedges and wedge actuating components shall be cast from grade 65-45-12 ductile iron material in accordance with ASTM A536.
4. Manufacturer / Model:
   a. EBAA Iron Inc. Megalug Series 1100, or
   b. Approved equal.

B. Plain End to Plain End Pipe Restraint Device:
1. Joint restraint to prevent axial separation shall be incorporated into the design of the sleeve or coupling used to connect two plain ends of same or dissimilar materials, such as ductile iron pipe, steel pipe, PVC pipe (C900, C905, or ASTM D2241) and or high density polyethylene (HDPE) pipe.
2. To prevent movement causing fitting to slide or rotate, internal pipe wall stiffeners must be used. The stiffeners must be sized to encompass the entire bearing length of the restraint devices.
3. Restraint devices shall consist of multiple gripping wedges incorporated into a follower gland. Restraint device shall have torque limiting twist-off nuts.
4. The coupling sleeve shall be coated internally with a minimum of 15mils of fusion bonded epoxy conforming to the applicable requirements of ANSI/AWWA C213.

© 2012 City of Franklin, Tennessee. All rights reserved.

5. Ductile Iron components shall meet or exceed the requirements of ASTM A536.
6. The restrained joining system shall meet the applicable requirements of AWWA C219, ANSI/AWWA C111/A21.11, and ASTM D2000.

7. Manufacturer / Model:
   a. EBAA Iron, Inc. Series 3800, or
   b. Approved equal.

2.9 FLANGED COUPLING ADAPTERS

A. Flanged coupling adapters shall be used to connect plain end pipe to flanged fittings, meters, valves, or equipment as shown on the Drawings shall be rated for 200 psi working pressure unless indicated otherwise.

B. Materials of Construction:

Body	Steel	ASTM A53
Flange		
3" thru 5" Pipe		ANSI 150 lb flat face
6" Pipe and above		AWWA C207 Class D, ANSI 150 lb drilling
Follower		
3" thru 12" Pipe	Ductile Iron	ASTM A536
14" Pipe and above	Heavy Rolled Steel	AISI C1018
Gasket		Grade 30
Bolts and Nuts	304 Stainless Steel	
Interior Coating	Fusion Bonded Epoxy	
Exterior Coating	2 Coats of Rust Inhibiting Synthetic Resin or Asphaltum Enamel	

C. Manufacturer / Model
   1. Smith-Blair Model 913 Steel Restrained Flanged Coupling Adapter with Optional Anchor Studs, or
   2. Approved equal.

2.10 FLEXIBLE EXPANSION JOINT

A. Flexible expansion joints shall be installed in the locations indicated on the Drawings. Flexible expansion joints shall be cast from grade 65-45-12 ductile iron conforming to the material requirements of ASTM A536 and ANSI/AWWA C153/A21.53.

B. Each flexible expansion joint shall be pressure tested at the factory against its own restraint to a minimum of 350 psi (250 psi for 30" diameter and larger.) A minimum 2:1 safety factor shall apply.

C. Each flexible expansion joint shall consist of an expansion joint designed and cast as an integral part of a ball and socket type flexible joint, having a minimum per ball deflection of:

© 2012 City of Franklin, Tennessee. All rights reserved.

20 degrees, 3 inch – 12 inch; 15 degrees, 14 inch – 36 inch; 12 degrees, 48 inch and 4-inches minimum expansion. Additional expansion sleeves shall be available and easily added or removed at the factory or in the field. Both standardized mechanical joint and flange end connections shall be available.

D. All internal surfaces (wetted parts) shall be lined with a minimum of 15 mils of fusion bonded epoxy conforming to the applicable requirements of ANSI/AWWA C213. Sealing gaskets shall be constructed of EPDM. The coating and gaskets shall meet ANSI/NSF-61.

E. All external surfaces shall be coated with a catalyzed coal tar epoxy conforming to the material requirements of AWWA C210. Appropriately sized polyethylene sleeves, meeting ANSI/AWWA C105/A21.5, shall be included for direct buried applications.

F. Manufacturer / Model:
   1. EBAA Iron, Inc. FLEX-TEND, or
   2. Approved equal.

2.11 CONCRETE VAULTS AND ACCESSORIES

A. Concrete vaults shall be rectangular or circular, either precast or cast-in-place reinforced concrete, of the dimensions and specifications noted on the Drawings. Concrete shall have a 28-day compressive strength of 4000 psi. Circular precast concrete barrel sections for valve vaults shall conform to ASTM C478 except sections deeper than 12 feet shall have reinforcing equal to that ASTM C76 Class III reinforced concrete pipe unless otherwise noted on the Drawings.

B. Precast section joints shall be mortared or grouted; joined with ASHTO M-198-75 preformed flexible butyl type joint sealant. Joints should be water tight
   1. Manufacturer / Model:
      a. Hamilton-Kent “Kent-Seal No. 2”,
      b. K.T. Snyder Company “rub ‘r-Nek”,
      c. Press Seal Gasket “E-Z Stik”, or
      d. Approved equal.

C. Concrete Vault Hatch
   1. Channel frame shall be 1/4 inch (7 mm) thick extruded aluminum with a mill finish, incorporating a continuous concrete anchor. A 1-1/2 inch (38 mm) drainage coupling shall be located in the front left corner of the channel frame. A bituminous coating shall be applied to the frame exterior where it will come into contact with concrete. The entire frame must be supported by a full bed of Class A concrete (H-20 load rating).
   2. The door panel(s) shall be 1/4 inch (7 mm) aluminum diamond plate, reinforced to withstand a live load of 300 psf or H-20 uniform live load with a maximum allowable deflection of 1/150 of the span and shall not protrude into the channel frame when in the open position. In grassed or landscaped (non-traffic) areas the access door shall be designed for 300 psf loading. In areas that may receive light vehicle traffic, such as sidewalks or edges of parking lots, the access door shall be designed for H-20 wheel loading.
   3. Doors shall open to 90 degrees and automatically lock with a T-316 stainless steel hold open arm with an aluminum release handle. For ease of operation, the door hold open arm shall incorporate an enclosed stainless steel compression spring assist.

© 2012 City of Franklin, Tennessee. All rights reserved.

4. Doors shall close flush with the frame and rest on a built-in neoprene cushion/gasket (300 psf load rating).
5. Hinges and all fastening hardware shall be T-316 stainless steel.
6. Unit shall lock with a T-316 stainless steel slam lock with removable key and have a non-corrosive handle.
7. Unit shall carry a lifetime guarantee against defects in material and/or workmanship.
8. Manufacturer / Model:
   a. Halliday Products, Inc., Orlando, Florida, Series W2C (double leaf), or
   b. Approved equal.

D. Ladder/Steps:
1. Ladder/steps shall be steel encased in copolymer polypropylene plastic (or equal), "Press Fit" type, have an overall width of 12 inches, and spaced at 12 inches.
2. Manufacturer:
   a. M.A. Industries, or
   b. Approved equal.

E. A vent shall be provided in the top of the vault. The vent shall be constructed of PVC, a minimum of 3 feet tall, and a minimum of 4-inches in diameter with a 24 mesh stainless steel screen. The vent shall be located such that it does not interfere with the opening/closing of the hatch or impede access to the vault interior. The vault penetration shall be a thrust collar wall pipe cast integrally into the vault top. The vent shall be flanged and bolt to the wall sleeve.

F. Pipe Penetrations shall be water tight and sealed in the vault wall opening with flexible and/or rigid connections. At least one pipe penetration shall be a rigid connection.
1. Flexible connections shall be provided using resilient connectors meeting the requirements of ASTM C-923. Resilient connectors shall be compression type cast integrally into the vault wall.
   a. Manufacturer:
      1) A-Lok Products, Inc., Tullytown, PA, or
      2) Approved equal.
2. Rigid Connections shall be provided using a thrust collar wall pipe. Thrust collar wall pipes shall be cast integrally into the vault wall. Thrust collar wall pipes shall meet the requirements of ductile iron flanged piping, as specified herein, unless otherwise specified.
   a. Manufacturer:
      1) U.S. Pipe,
      2) American Ductile Iron Pipe, or
      3) Approved equal.

G. Vault Drainage:
1. Vault drainage shall be as noted on the Drawings and according to the following.
   a. Drain pipe shall be schedule 80 PVC and penetrate the wall at floor level. Slope of drain line shall be in accordance with local plumbing codes. A varmint screen shall be installed on the drain line inside the vault for ease of maintenance. A flap valve shall be installed on the drain line discharge.
   b. The vault floor shall have a sump with a minimum depth of 12-inches and a minimum inside diameter of 14-inches. The sump is not required to be cast integrally in the floor of precast vaults. However, the seal between the vault and the sump shall be watertight and no part of the sump will be allowed to extend

© 2012 City of Franklin, Tennessee. All rights reserved.

above the floor thereby inhibiting drainage. The sump shall be concrete or HDPE.

1) The sump pump shall be automatic with level operation. It shall operate on 115 volt, single phase, 60 hz power. The pump shall be 1/3 horsepower and pump a maximum flow of 30 gpm at 10-feet of head with a 1-1/2 inch discharge.
2) Manufacturer / Model:
   a) Water Ace Model R3V, or
   b) Approved equal.

H. Vault electrical, if any, shall be in accordance with the requirements of the Specifications and Drawings.

I. Vault Piping:
1. Piping shall be supported with column type pipe saddle supports, concrete block, or other Owner-approved method.
   a. Column type pipe saddle supports shall be stanchion type with vertical adjustability and U-bolt attachment to pipe. The stanchion shall be properly sized to carry the pipe load. The saddle assembly and base shall be cast iron or carbon steel.
      1) Manufacturer:
         a) Grinnell Corporation, Providence, RI, or
         b) Approved equal.
   b. Concrete pipe supports shall be full or half-size, solid CMU placed under pipe, valves, meters, etc. flanges or under flanged base bends. Flanged base bends shall be bolted to the concrete pipe support.
2. Piping shall be insulated in accordance with Paragraph 2.8 subparagraphs a and c and/or have heat tape.

J. Valves shall be in accordance with Division 33 Section "Valves"

K. Meters shall be in accordance with Division 33 Section “Reclaimed Service Assemblies.”

L. Manufacturer:
1. Cloud Concrete Products of Nashville, Inc, or
2. Approved equal.

2.12 LINE MARKERS

A. Markers shall be single piece design, constructed of durable, UV resistant, composite material, and have a pointed end for ease of installation. The marker shall have a constant flat “T” cross-sectional design and be 3.75 inch in width and of such length to provide a minimum height above the ground surface of 44 inches and a minimum embedment depth of 18 inches. The marker shall resist displacement from wind and vehicle impact forces. The marker shall be free of burns, discoloration, cracks, bulges, or other objectionable marks. A line shall be stamped horizontally across the front of the marker to indicate proper burial depth.

B. The marker shall be pigmented throughout the entire cross-section so as to produce a uniform color which is an integral part of the material. The marker shall be colored purple.

© 2012 City of Franklin, Tennessee. All rights reserved.

C. Line markers shall be labeled with the lettering "CAUTION RECLAIMED WATER - DO NOT DRINK" with the Owner's name and telephone number written below the lettering.

D. Manufacturer / Model:
1. Carsonite International, Early Branch, SC Model CUM 375 or
2. Approved equal.

All new common areas where reclaimed water is used and that are accessible to the general public shall be posted with conspicuous signs that include the flowing wording in a size acceptable to the WMD:

"CAUTION RECLAIMED WATER - DO NOT DRINK "and **"AVISA - AGUA IMPURA - NO TOMAR"** on the other side.

Each sign shall also display an international symbol conveying the same warning.

2.13 UTILITY WARNING TAPE

A. Detectable underground utility warning tape, which can be located from the surface by a pipe detector, shall have of a minimum thickness of 0.35 mils solid aluminum foil encased in a protective inert plastic jacket that is impervious to all known alkalis, acid, chemical reagents and solvents found in the soil. The tape shall have a minimum overall thickness of 5.0 mils and a minimum width of 6 inch (metallic piping) with a minimum unit weight of 2-1/2 pounds/ 1 inch x 1,000 foot. The tape shall be color coded purple in accordance with APWA National Color Code and permanently imprinted "Caution Buried Reclaimed Water Line Below".

B. Manufacturer / Model:
1. Allen Systems, "Detect Tape",
2. Empire Level Mfg. Corp., "Magnatee", or
3. Approved equal.

2.14 DETECTION WIRE

A. Detection wire shall be UL approved, 14 AWG, type THHN solid copper. The wire shall be color coded purple in accordance with APWA National Color Code.

PART 3 - EXECUTION

3.1 EARTHWORK

A. Refer to Division 31 Section "Earthwork" for excavating, trenching, and backfilling.

B. Unless the construction of lines by tunneling, jacking, or boring is called for by the drawings or specifically authorized by the Owner, make excavation for pipelines in open cut and true to the lines and grades shown on the drawings or established by the Owner on the ground. Cut the banks of trenches between vertical parallel planes equidistant from the pipe centerline. The horizontal distance between the vertical planes (or, if sheeting is used, between the inside

© 2012 City of Franklin, Tennessee. All rights reserved.

faces of that sheeting) shall vary with the size of the pipe to be installed, but shall not be more than the distance determined by the following formula: 4/3d + 15 inches, where "d" represents the internal diameter of the pipe in inches. When approved in writing by the Owner, the banks of trenches from the ground surface down to a depth not closer than 1 foot above the top of the pipe may be excavated to non-vertical and non-parallel planes, provided the excavation below that depth is made with vertical and parallel sides equidistant from the pipe centerline in accordance with the formula given above. Any cut made in excess of formula 4/3d + 15 inches shall be at the expense of the Contractor and may be cause for the Owner to require that stronger pipe and/or a higher class of bedding be used at no cost to the Owner.

C. Do not excavate pipe trenches more than 200 feet ahead of the pipe laying, and not more than two hundred (200) feet of open ditch shall be left behind the pipe laying, and perform all Work so as to cause the least possible inconvenience to the public. Construct temporary bridges or crossings when and where the Owner deems necessary to maintain vehicular or pedestrian traffic.

D. In all cases where materials are deposited along open trenches, place them so that in the event of rain no damage will result to the Work and/or to adjacent property.

3.2 PIPING APPLICATIONS

A. Use pipe, fittings, and joining methods for piping systems according to the following applications.
   1. Transition couplings and special fittings with pressure ratings at least equal to piping pressure rating maybe used in applications below, unless otherwise indicated.
   2. Do not use flanges, unions, or keyed couplings for underground piping.
   3. Flanges, unions, keyed couplings, and special fittings shall be used, instead of joints indicated, on aboveground piping and piping in vaults.

3.3 JOINT CONSTRUCTION

A. Clean and assemble pipe joints and fittings according to the following:
   1. PVC Piping Gasketed Joints: Use joining materials according to AWWA C900. Construct joints with elastomeric seals and lubricant according to ASTM D 2774 or ASTM D 3139 and pipe manufacturer's written instructions.
   2. Dissimilar Materials Piping Joints: Use adapters compatible with both piping materials, with OD, and with system working pressure.

3.4 PIPING INSTALLATION

A. Install ductile iron pipe and fittings according to AWWA C600 and AWWA M41.

B. Install PVC pipe and fittings according to AWWA M23 and ASTM F645.

C. Unless otherwise indicated by the Drawings or Division 33 requirements, bury piping with a depth of cover of at least 36 inches, with top of pipe at least 12 inches below level of maximum frost penetration, and according to the following:
   1. Under Driveways: With at least 36 inches cover over top of pipe.
   2. Under Roadways: With at least 42 inches cover over top of pipe.
   3. Under Railroad Tracks: With at least 48 inches cover over top of pipe.

© 2012 City of Franklin, Tennessee. All rights reserved.

4. Over or Under Gas Pipelines: Minimum 18 inches vertical separation and 10 feet horizontal separation.
5. Over Sewer Lines: With at least 18 inches vertical separation and 10 feet horizontal separation.

D. Lay the pipe to and keep it at the lines and grades required by the drawings. All fittings shall be at the required locations, and spigots well centered in the bells and all valves and stems plumb.
1. The pipe shall slope continuously between high and low points and have a minimum of 60 inches cover at the high points. No departure from this policy shall be made except at the order of the Owner.
2. After a length of pipe has been placed in the trench, center the spigot end in the bell of the adjacent pipe, and then insert to the depth specified by the manufacturer and bring to the correct line and grade. Secure the pipe in place by tamping an approved backfill material around it.
3. Make all joints, whether standard mechanical or push-on joints, in conformance with the recommendations of the joint manufacturer as approved by the Owner.

E. Provide and use tools and facilities that are satisfactory to the Owner and that will allow the Work to be done in a safe and convenient manner. Use a derrick, ropes, or other suitable equipment to lower all pipe and fittings into the trench one piece at a time. Carefully lower each piece so that neither it nor any protective coating or lining it may have will be damaged. Under no circumstances, drop or dump pipe materials into the trench.
1. Lower no pipes and fittings into the trench until they have been swabbed to remove any mud, debris, etc., that may have accumulated within them. After the pipe has been lowered, remove all unnecessary materials from it. Before any pipe is laid, brush and wipe clean the outside of its spigot end and the inside of its bell and ensure that the pipe is dry and oil-free.
2. Take every precaution to keep foreign material from getting into the pipe while it is being placed in the line. If the crew laying the pipe cannot put it into the trench and in place without allowing earth to get inside it, then place a heavy, tightly woven canvas bag of suitable size over each end of the pipe and leave it there until it is time to connect that pipe to the one adjacent to it.
3. Place no debris, tools, clothing, or other materials in the pipe during laying operations.

F. Bell holes shall be big enough so that there is ample room for the pipe joints to be properly made. Between bell holes, carefully grade the bottom of the trench so that each pipe barrel will rest on a solid foundation for its entire length.

G. Whenever pipe laying is not in progress, close the open ends of pipe in the trench with a watertight plug or by other means approved by the Owner. Caulk the joints of any pipe in the trench that cannot be completed until a later time with packing in order to make them as watertight as possible; this shall be done not only at the end of each working day but also before work is stopped for lunch periods, bad weather, or any other reason. If there is water in a trench, this seal shall remain in place until the trench has been pumped completely dry.

H. The cutting of pipe so that fittings or closure pieces can be inserted shall be done in a neat and workmanlike manner and without any damage to the pipe. Follow the manufacturer's recommendations concerning how to cut and machine the ends of the pipe in order to leave a smooth end at right angles to the pipe's axis.
1. The flame cutting of pipe by means of an oxyacetylene torch will not be allowed.

© 2012 City of Franklin, Tennessee. All rights reserved.

I. Unless otherwise directed by the Owner, lay pipe with the bell ends facing in the direction of laying.

J. Wherever pipe must be deflected from a straight line (in either the vertical or horizontal plane) in order to avoid obstructions or plumb stems, or wherever long radius curves are permitted, the amount of deflection shall not exceed that necessary for the joint to be satisfactorily made, nor that recommended by the pipe manufacturer, and shall be approved by the Owner.

K. Lay no pipe in water or when it is the Owner's opinion that trench conditions are unsuitable. If crushed stone is used to improve trench conditions or as backfill for bedding the pipe, this shall be considered incidental to the project, and no separate payment will be made for its use.

L. When required, utility warning tape and detection wire shall be buried below the surface and directly above pipe as specified in Division 33 sections.
   1. For all non-metallic piping installations, install continuous underground detection wire. Affix wire to top of pipe prior to backfilling. Wire shall be stripped and tied to valves for continuity.
   2. For all underground piping installations, install continuous underground detectable warning tape during backfilling of trench.
      a. Installation of detectable tape shall be per manufacturer's recommendations and shall be as close to the grade as is practical for optimum protection and detectibility. Allow a minimum of 18 inches between the tape and the utility line. Allow a minimum of 6 inches between the tape and the ground surface.
      b. Installation of detectable tape shall be per manufacturer's recommendations. Allow a minimum of 18 inches between the tape and the utility line. Allow a minimum of 12 inches between the tape and the ground surface.

M. Install piping by trenchless methods, where indicated on the Drawings, in accordance with Division 33 Section "Trenchless Installation of Utilities".

N. Install underground piping with restrained joints at horizontal and vertical changes in direction. Use restrained joint piping, thrust blocks, anchors, mechanical joint restraint, tie-rods and clamps, and other supports.
   1. Install thrust blocks wherever the pipe line changes direction (e.g., at tees and bends), at dead ends, or at any other point where the manufacturer recommends and/or the Owner indicates that they are to be used.

O. Contractor shall adhere to the requirements of Division 31 Section "Earthwork" for installation and backfilling.
   1. Begin backfilling after the line construction is completed and then inspected and approved by the Owner. On each side of the line, from the bottom of barrel to 1 foot above the top of the pipe, the backfill material shall be select backfill consisting of either of fine, loose earth like sandy soil or loam or of granular material that is free from clods, vegetable matter, debris, stone, and/or other objectionable materials and that has a size of not more than 2 inches. Place this backfill simultaneously on either side of the pipe in even layers that before compaction, are no more than 6 inches deep. Thoroughly and completely tamp each layer into place before placing additional layers. At locations beneath or closely adjacent to pavement this backfill shall consist of No. 67 (TDOT) crushed stone.

© 2012 City of Franklin, Tennessee. All rights reserved.

2. If pipe is installed in a rock trench, install a 6 inches bedding of No. 67 (TDOT) crushed stone. Then add additional No. 67 (TDOT) stone backfill up to 1 foot above the top of the pipe as shown on the plans.
3. From 1 foot above the pipe upward, the backfill material may contain broken stones that make up approximately 3/4 of the backfill's total volume. However, if this type of backfill is used, there must be enough spalls and earth materials to fill all voids completely. The maximum dimension of individual stones in such backfill shall not exceed 6 inches, and the backfill material shall be placed and spread in even layers not more than 12 inches deep. At locations beneath or closely adjacent to pavement or at locations of improvements subject to damage by displacement the backfill shall be entirely No. 67 (TDOT) stone. Tamp and thoroughly compact the backfill in layers that, before compaction, are 6 inches deep. In other areas, the backfill for the upper portion of the trenches may be placed without tamping but shall be compacted to a density equivalent to that of adjacent earth material as determined by laboratory tests. Use special care to prevent the operation of backfilling equipment from causing any damage to the pipe.
4. Wherever pipes have diameters of 15 inches or less, do not use power operated tampers to tamp that portion of the backfill around the pipe within 1 foot above the pipe.
5. Perform backfilling so as not to disturb or injure any pipe and/or structure against which the backfill is being placed. If any pipe or structure is damaged and/or displaced during backfilling, open up the backfill and make whatever repairs are necessary.
6. Backfilling and clean-up operations shall closely follow pipe laying; failure to comply with this provision will result in the Owner's requiring that the Contractor's other activities be suspended until backfilling and clean-up operations catch up with pipe laying.

P. Install line markers directly above pipeline alignment at intervals of 1,000 feet where indicated on the Drawings. Line markers shall be installed after final clean-up is completed.

3.5 CONCRETE VAULT INSTALLATION

A. Dewater sufficiently to maintain the ground water level at or below the bottom of the vault foundation prior to and during placement of the foundation.

B. Obtain an adequate foundation for the structure by removing and replacing unsuitable material with well graded granular material, by tightening with coarse rock, or by such other means as provided for foundation preparation of the connected lines or as directed by the Owner. Wherever water is encountered at the site, place all cast-in-place bases or monolithic structures on a one-piece waterproof membrane to prevent any movement of water into the fresh concrete.

C. When the foundation subgrade has been prepared and is approved by the Owner, carefully construct the foundation for precast and monolithic structures to the line and grade required by the Drawings. The foundation shall be well graded granular material. In no case shall the vault be supported directly on rock.

D. Vault foundation shall be constructed such that the vault is fully and uniformly supported in true alignment according to the Drawings and as site conditions allow. Make sure that all entering pipe can be installed at proper grade.

© 2012 City of Franklin, Tennessee. All rights reserved.

E. Thoroughly wet and the completely fill all lift holes and all interior joints between precast elements with non-shrink grout. Smooth them inside to ensure water tightness.

F. Carefully set the vault top at the required elevation, and properly bond it to the vault with cement grout or rubber sealant. Wherever vaults are constructed in paved areas, tilt the vault top so as to conform to the exact slope and grade of the existing adjacent pavement.

G. Place backfill by hand around the vault and to a distance of at least one pipe length into each trench, and tamp with selected material up to an elevation of 12 inches above the crown of all entering pipes. Continue backfilling in accordance with the requirements for trench backfilling.

H. Install pipe supports in accordance with the manufacturer's recommendations. Supports shall be installed in the locations shown on the Drawings. In cases where supports are not shown, supports shall be furnished and installed at appropriate locations to ensure adequate support of piping, valves, etc. Supports shall be installed in locations that ease removal and re-alignment of valves, meters, etc.

I. After the vault had been adjusted to the proper grade, it shall be visually inspected by the Contractor in the presence of the Resident Project Representative. Any defects noted shall be corrected by the Contractor until the work is found satisfactory to the Resident Project Representative. In addition, at the Owner's request, the Contractor may be required within one year to visually inspect any vault(s) that were adjusted. Any work that has become defective shall be redone by the Contractor at no additional expense to the Owner.

J. Vault shall have positive drainage when site conditions allow. When positive drainage is not available, a sump pump shall be installed.

3.6 FIELD QUALITY CONTROL

A. Cleanup: Contractor is required to grade and clean all areas affected by the installation and backfilling of the pipe trench. The Contractor shall do this work within the following constraints:
   1. At a minimum:
      a. No earlier than 2 weeks of pipe trench backfilling; and,
      b. No later than 10,000 feet of additional pipe installation.
   2. At a maximum:
      a. No later than 3 weeks of pipe trench backfilling.

B. Piping Tests: Conduct piping tests after thrust blocks have hardened sufficiently. Fill pipeline 24 hours before testing and apply test pressure to stabilize system. Use only potable water. Conduct tests in accordance with AWWA C600 for ductile iron AWWA C605 for PVC, and AWWA Manual M55 for HDPE.

Piping Test Methods Table

Procedure	Pressure	Duration of Test
Simultaneous Pressure And Leakage Tests	150% of working pressure* at point of test, but not less than 125% of normal working pressure at	2 h

© 2012 City of Franklin, Tennessee. All rights reserved.

	highest elevation. †	
Separate Pressure Test	150% of working pressure* at point of test, but not less than 125% of normal working pressure at highest elevation. †	1h
Separate Leakage Test	150% of working pressure* of segment tested. †	2h

* Working pressure is defined as maximum anticipated sustained operating pressure.
† In no case shall the test pressure be allowed to exceed the design pressure for pipe, appurtenances, or thrust restraints.

1. Pressure Tests:
   a. Slowly fill each valved section of pipe with water, and apply the specified test pressure (based on the elevation of the lowest point of the line or section under test and corrected to the elevation of the test gauge) with a pump connected to the pipe in a manner satisfactory to the Owner. Furnish the pump, pipe, connections, gauges, and all necessary apparatus.
   b. Before applying the specified test pressure, expel all air from the pipe. If air release valves are not available at high points, make the necessary taps at the point of highest elevation before testing, and insert plugs after the test has been completed.
   c. Carefully examine all exposed pipe, fittings, valves, and air release valves during the test. Remove any cracked or defective pipes, fittings, valves, or air release valves discovered in consequence of this pressure test, and replace with sound material in the manner specified. Repeat the test until the results are satisfactory to the Owner/Engineer.
2. Leakage Tests:
   a. Leakage is defined as the amount of water which must be supplied to the newly laid pipe or any valved section in order to maintain the specified leakage test pressure within 5 psi after pipe has been filed with water and the air expelled.
   b. For PVC pipe, allowable leakage is defined as:

$$L = \frac{ND\sqrt{P}}{7{,}400}$$

Where:
- L = allowable leakage, in gallons per hour
- N = number of joints in length of pipeline tested
- D = nominal diameter of the pipe, in inches
- P = average test pressure during the leakage test, in pounds per square inch (gauge)

When testing against closed metal-seated valves, an additional leakage per closed valve of 0.078 GPH/in. of nominal valve size shall be allowed.

ALLOWABLE LEAKAGE PER 50 JOINTS OF PVC PIPE* - GPH[H]

Avg. Test Pressure	Nominal Pipe Diameter - *in.*											
Psi	**4**	**6**	**8**	**10**	**12**	**14**	**16**	**18**	**20**	**24**	**30**	**36**
250	0.43	0.64	0.85	1.07	1.28	1.50	1.71	1.92	2.14	2.56	3.21	3.85
225	0.41	0.61	0.81	1.01	1.22	1.42	1.62	1.82	2.03	2.43	3.04	3.65
200	0.38	0.57	0.76	0.96	1.15	1.34	1.53	1.72	1.91	2.29	2.87	3.44

© 2012 City of Franklin, Tennessee. All rights reserved.

ALLOWABLE LEAKAGE PER 50 JOINTS OF PVC PIPE* - GPH[H]

Avg. Test Pressure	Nominal Pipe Diameter - *in.*											
Psi	**4**	**6**	**8**	**10**	**12**	**14**	**16**	**18**	**20**	**24**	**30**	**36**
175	0.36	0.54	0.72	0.89	1.07	1.25	1.43	1.61	1.79	2.15	2.68	3.22
150	0.33	0.50	0.66	0.83	0.99	1.16	1.32	1.49	1.66	1.99	2.48	2.98
125	0.30	0.45	0.60	0.76	0.91	1.06	1.21	1.36	1.51	1.81	2.27	2.72
100	0.27	0.41	0.54	0.68	0.81	0.95	1.08	1.22	1.35	1.62	2.03	2.43

* If the pipeline under test contains sections of various diameters, the allowable leakage will be the sum of the computed leakage for each size.
H Calculated on the basis of leakage equation.

c. For ductile iron pipe, allowable leakage is defined as:

$$L = \frac{SD\sqrt{P}}{133{,}200}$$

Where:
- L = allowable leakage, in gallons per hour
- S = length of pipe tested, in feet
- D = nominal diameter of the pipe, in inches
- P = average test pressure during the leakage test, in pounds per square inch (gauge)

When testing against closed metal-seated valves, an additional leakage per closed valve of 0.0078 GPH/in. of nominal valve size shall be allowed.

ALLOWABLE LEAKAGE PER 1000 FEET OF PIPELINE* - GPH[H]

Avg. Test Pressure	Nominal Pipe Diameter – *in.*												
psi	**3**	**4**	**6**	**8**	**10**	**12**	**14**	**16**	**18**	**20**	**24**	**30**	**36**
250	0.36	0.47	0.71	0.95	1.19	1.42	1.66	1.90	2.14	2.37	2.85	3.56	4.27
225	0.34	0.45	0.68	0.90	1.13	1.35	1.58	1.80	2.03	2.25	2.70	3.38	4.05
200	0.32	0.43	0.64	0.85	1.06	1.28	1.48	1.70	1.91	2.12	2.55	3.19	3.82
175	0.30	0.40	0.59	0.80	0.99	1.19	1.39	1.59	1.79	1.98	2.38	2.98	3.58
150	0.28	0.37	0.55	0.74	0.92	1.10	1.29	1.47	1.66	1.84	2.21	2.76	3.31
125	0.25	0.34	0.50	0.67	0.84	1.01	1.18	1.34	1.51	1.68	2.01	2.52	3.02
100	0.23	0.30	0.45	0.60	0.75	0.90	1.05	1.20	1.35	1.50	1.80	2.25	2.70

* If the pipeline under test contains sections of various diameters, the allowable leakage will be the sum of the computed leakage for each size.
H Calculated on the basis of Eq. 1.

d. Should any test of pipe laid disclose leakage greater than that specified, the Contractor shall, at his own expense, locate and repair the defective joints until the leakage is within the specified allowance.

3. Prepare reports of all pressure and leakage test activities.
4. No additional payment shall be made for pressure testing, leakage testing, water, flushing, taps for testing, equipment or other items necessary to perform testing.

END OF SECTION

© 2012 City of Franklin, Tennessee. All rights reserved.

PART 1 - GENERAL

1.1 RELATED DOCUMENTS

A. Drawings and general provisions of the Contract, including General and Supplementary Conditions and other Division 01 Specification Sections, apply to this Section.

1.2 SUMMARY

A. This Section includes requirements for sewage force main piping.

B. Related Sections include the following:
1. Division 31 Earthwork Sections for excavation requirements.
2. Division 33 Section "Trenchless Installation of Utilities" for casing pipe requirements.

1.3 DEFINITIONS / STANDARDS

A. The following are industry abbreviations for metal and plastic materials:
1. DIP: Ductile iron pipe
2. PVC: Polyvinyl chloride plastic.

B. DIP shall be used for sewage force mains 4 inches and larger.

C. Buried piping shall be of the bell and spigot, mechanical joint, butt fusion, and/or electrofusion type as required by material and application.

D. Non-buried piping shall have flanged ends, unless otherwise noted on the Drawings.

E. Use Mechanical Joint Fitting Restraining Device for plain end piping connections to fittings, valves, etc.

1.4 SUBMITTALS

A. Product Data:
1. Ductile iron pipe.
2. Ductile iron fittings.
3. Ductile iron flanged pipe.
4. Molecularly oriented polyvinyl chloride pipe.
5. Pipe insulation and accessories.
6. Mechanical joint restraint devices.
7. Flanged coupling adapters.
8. Flexible expansion joint.
9. Concrete vaults and accessories.
10. Line markers.
11. Utility warning tape.
12. Detection wire.

B. Shop Drawings:
1. Concrete vaults and manholes, including hatches, frames and covers, ladders, and drains.

© 2012 City of Franklin, Tennessee. All rights reserved.

C. Operation and Maintenance Data: For specialties to include in emergency, operation, and maintenance manuals. Include the following:
   1. Hatches for concrete vaults.
   2. Valves.
   3. Protective enclosures.

1.5 QUALITY ASSURANCE

A. Product Options: Drawings indicate size, profiles, and dimensional requirements of piping and specialties and are based on the specific system indicated.

B. Comply with regulatory requirements of local, state and federal agencies having jurisdiction.

C. Piping material shall bear label, stamp, or other markings of specified testing agency.

D. Comply with ASTM F645 for selection, design, and installation of thermoplastic water piping.

E. Comply with NSF 61 for materials.

F. The pipe manufacturer must furnish the Owner a notarized certificate stating that the pipe furnished has been manufactured and tested in accordance with the applicable standards.

G. The length of each individual piece of ductile iron pipe shipped must be plainly marked on each piece of pipe. Each piece of pipe shall bear the manufacturer's name or trademark, the year in which it was produced, and the letters "DI" or the word "DUCTILE".

H. All ductile iron pipe shall be the product of one American based manufacturer with a minimum of five (5) years of experience in manufacturing the size, class, and quantity of pipe specified herein. The manufacturer must have a successful performance record on projects of comparable scope and magnitude.

I. Coordinate this work with that required by other sections for timely execution.

J. It shall be the Contractor's responsibility to ensure that all necessary materials are furnished to them and that those found to be defective in manufacture are replaced at no extra cost to the Owner. Materials damaged in handling after being delivered by the manufacturer shall be replaced at the Contractor's own expense. If installed material is found to be defective before the final acceptance of the work, the cost of both the material and labor needed to replace it shall not be passed on to the Owner.

K. Furnish all material, equipment, tools, and labor in connection with the sewage force main, complete and in accordance with the drawings and these specifications.

1.6 PRODUCT DELIVERY, STORAGE, AND HANDLING

A. Delivery: Deliver piping with factory-applied end caps. Maintain end caps through shipping, storage, and handling to prevent pipe-end damage and to prevent entrance of dirt, debris, and moisture.

B. Storage:

© 2012 City of Franklin, Tennessee. All rights reserved.

1. The Contractor shall be responsible for safely storing materials needed for the work that have been accepted by them until they have been incorporated into the completed project.
2. Protect stored piping from moisture and dirt. Elevate above grade. Do not exceed structural capacity of floor when storing inside.
3. Store plastic piping protected from direct sunlight. Support to prevent sagging and bending.

C. Handling: Protect flanges, fittings, and specialties from moisture and dirt.

1.7 GENERAL REQUIREMENTS

A. Force mains may be installed within the same ditch line as gravity sewer provided that the same spacing requirement regarding to water lines is maintained. Special care shall be provided to protect both the force main and the gravity sewer during construction and during the operation of the sanitary sewer system.

B. Where force mains are installed in new fill, a compaction letter sealed by a Geotechnical Engineer registered in the State of Tennessee shall be submitted to the Owner prior to accepting said utilities. An acceptable compaction letter shall state that field density testing indicates the fill has been compacted to at least 95% of the maximum dry density according to the Standard Proctor. If a compaction letter is not available, special protection such as replacement with ductile iron pipe with joint restraint or encasement with flowable fill shall be utilized as approved by the WMD.

PART 2 - PRODUCTS

2.1 DUCTILE IRON PIPE

A. Ductile iron pipe for sewage force main use shall have Protecto 401 ceramic epoxy lining. Refer to Division 33 Section “Sanitary Sewer (Gravity)” for detailed specifications for ductile iron pipe.

2.2 DUCTILE IRON FITTINGS

A. Ductile iron fittings for sewage force main use shall have Protecto 401 ceramic epoxy lining. Refer to Division 33 Section “Sanitary Sewer (Gravity)” for detailed specifications for ductile iron fittings.

2.3 DUCTILE IRON FLANGED PIPE

A. Flanged pipe shall meet the requirements of ductile iron pipe, as specified herein, unless otherwise specified.

B. All ductile iron flanged pipe shall comply with ANSI A21.15/AWWA C115, latest revision. The pipe barrel shall be manufactured in accordance with ANSI A21.51/AWWA C151, latest revision. All flanges shall be ductile iron and rated for 250 psi working pressure. To insure accountability, all flanged pipe shall be fabricated at the factory by the barrel manufacturer.

© 2012 City of Franklin, Tennessee. All rights reserved.

All flanges (unless otherwise indicated or required) shall be faced and drilled ANSI B16.1 125-pound for ductile iron and ANSI B16.5 150-pound for steel.

C. Provide a flanged pipe gasket for each joint made of Styrene Butadiene Copolymer (SBR) or Ethylene Propylene Diene Monomer (EPDM) which meet all the material requirements of ANSI A21.11/AWWA C111.

D. Gaskets for flanged pipe with an operating pressure greater than 160 psi shall be Toruseal Flange Gasket as manufactured by American Cast Iron Pipe Company, American Ductile Iron Pipe Division, or approved equal.

E. Manufacturer:
   1. U.S. Pipe
   2. American Cast Iron Pipe Company
   3. Approved equal

2.4 PIPE INSULATION AND ACCESSORIES

A. Refer to Division 33 Section "Sanitary Sewer (Gravity)" for pipe insulation and accessories.

2.5 MECHANICAL JOINT FITTING RESTRAINT DEVICES

A. Refer to Division 33 Section "Sanitary Sewer (Gravity)" for ductile iron pipe restraint devices.

2.6 FLANGED COUPLING ADAPTERS

A. Refer to Division 33 Section "Sanitary Sewer (Gravity)" for flanged coupling adapters.

2.7 FLEXIBLE EXPANSION JOINT

A. R.efer to Division 33 Section "Sanitary Sewer (Gravity)" for flexible expansion joints.

2.8 CONCRETE VAULTS AND ACCESSORIES

A. Refer to Division 33 Section "Sanitary Sewer (Gravity)" for concrete vaults and accessories.

2.9 LINE MARKERS

A. Markers shall be single piece design, constructed of durable, UV resistant, composite material, and have a pointed end for ease of installation. The marker shall have a constant flat "T" cross-sectional design and be 3.75 inch in width and of such length to provide a minimum height above the ground surface of 44 inches and a minimum embedment depth of 18 inches. The marker shall resist displacement from wind and vehicle impact forces. The marker shall be free of burns, discoloration, cracks, bulges, or other objectionable marks. A line shall be stamped horizontally across the front of the marker to indicate proper burial depth.

B. The marker shall be pigmented throughout the entire cross-section so as to produce a uniform color which is an integral part of the material. The marker shall be colored brown.

C. Line markers shall be labeled with the lettering "CAUTION FORCE MAIN" with the Owner's name and telephone number written below the lettering.

© 2012 City of Franklin, Tennessee. All rights reserved.

D. Manufacturer / Model:
   1. Carsonite International, Early Branch, SC Model CUM 375 or
   2. Approved equal.

2.10 UTILITY WARNING TAPE

A. Detectable underground utility warning tape, which can be located from the surface by a pipe detector, shall have of a minimum thickness of 0.35 mils solid aluminum foil encased in a protective inert plastic jacket that is impervious to all known alkalis, acid, chemical reagents and solvents found in the soil. The tape shall have a minimum overall thickness of 5.0 mils and a minimum width of 3 inch (non-metallic piping) with a minimum unit weight of 2-1/2 pounds/ 1 inch x 1,000 foot. The tape shall be color coded brown in accordance with APWA National Color Code and permanently imprinted "Caution Buried Force Main Below".

B. Non-detectable underground utility warning tape shall be installed directly above all utility lines. The tape shall be polyethylene and have a minimum thickness of 4 mils and a minimum width of 3 inches. The tape shall be color coded brown in accordance with APWA National Color Code and permanently imprinted "Caution Buried Force Main Below".

C. Manufacturer / Model:
   1. Allen Systems, "Detect Tape",
   2. Empire Level Mfg. Corp., "Magnatee", or
   3. Approved equal.

2.11 DETECTION WIRE

A. Detection wire shall be UL approved, 14 AWG, type THHN solid copper. The wire shall be color coded brown in accordance with APWA National Color Code.

PART 3 - EXECUTION

3.1 EARTHWORK

A. Refer to Division 31 Section "Earthwork" for excavating, trenching, and backfilling.

B. Unless the construction of lines by tunneling, jacking, or boring is called for by the drawings or specifically authorized by the Owner, make excavation for pipelines in open cut and true to the lines and grades shown on the drawings or established by the Owner on the ground. Cut the banks of trenches between vertical parallel planes equidistant from the pipe centerline. The horizontal distance between the vertical planes (or, if sheeting is used, between the inside faces of that sheeting) shall vary with the size of the pipe to be installed, but shall not be more than the distance determined by the following formula: 4/3d + 15 inches, where "d" represents the internal diameter of the pipe in inches. When approved in writing by the Owner, the banks of trenches from the ground surface down to a depth not closer than 1 foot above the top of the pipe may be excavated to non-vertical and non-parallel planes, provided the excavation below that depth is made with vertical and parallel sides equidistant from the pipe centerline in accordance with the formula given above. Any cut made in excess of formula 4/3d + 15 inches shall be at the expense of the Contractor and may be cause for the Owner to require that stronger pipe and/or a higher class of bedding be used at no cost to the Owner.

© 2012 City of Franklin, Tennessee. All rights reserved.

C. Do not excavate pipe trenches more than 200 feet ahead of the pipe laying, and not more than two hundred (200) feet of open ditch shall be left behind the pipe laying, and perform all work so as to cause the least possible inconvenience to the public. Construct temporary bridges or crossings when and where the Owner deems necessary to maintain vehicular or pedestrian traffic.

D. In all cases where materials are deposited along open trenches, place them so that in the event of rain no damage will result to the work and/or to adjacent property.

3.2 PIPING APPLICATIONS

A. Use pipe, fittings, and joining methods for piping systems according to the following applications.
   1. Transition couplings and special fittings with pressure ratings at least equal to piping pressure rating maybe used in applications below, unless otherwise indicated.
   2. Do not use flanges, unions, or keyed couplings for underground piping.
   3. Flanges, unions, keyed couplings, and special fittings shall be used, instead of joints indicated, on aboveground piping and piping in vaults.

3.3 JOINT CONSTRUCTION

A. Clean and assemble pipe joints and fittings according to the following:
   1. Ductile-Iron Piping, Gasketed Joints: AWWA C600 and AWWA M41.
   2. Ductile-Iron Piping, Grooved Joints: Cut-groove pipe. Assemble joints with keyed couplings, gaskets, lubricant, and bolts according to coupling manufacturer's written instructions.
   3. Dissimilar Materials Piping Joints: Use adapters compatible with both piping materials, with OD, and with system working pressure.

3.4 PIPING INSTALLATION

A. Install ductile iron pipe and fittings according to AWWA C600 and AWWA M41.

B. Unless otherwise indicated by the Drawings or Division 33 requirements, bury piping with a depth of cover of at least 36 inches, with top of pipe at least 12 inches below level of maximum frost penetration, and according to the following:
   1. Under Driveways: With at least 36 inches cover over top of pipe.
   2. Under Roadways: With at least 42 inches cover over top of pipe.
   3. Under Railroad Tracks: With at least 48 inches cover over top of pipe.
   4. Over or Under Gas Pipelines: Minimum 12 inches vertical separation and 10 feet of horizontal separation.

C. Lay the pipe to and keep it at the lines and grades required by the drawings. All fittings shall be at the required locations, and spigots well centered in the bells and all valves and stems plumb.
   1. The pipe shall slope continuously between high and low points and have a minimum of 60 inches cover at the high points. No departure from this policy shall be made except at the order of the Owner.
   2. After a length of pipe has been placed in the trench, center the spigot end in the bell of the adjacent pipe, and then insert to the depth specified by the manufacturer and bring

© 2012 City of Franklin, Tennessee. All rights reserved.

to the correct line and grade. Secure the pipe in place by tamping an approved backfill material around it.

3. Make all joints, whether standard mechanical or push-on joints, in conformance with the recommendations of the joint manufacturer as approved by the Owner.

D. Provide and use tools and facilities that are satisfactory to the Owner and that will allow the work to be done in a safe and convenient manner. Use a derrick, ropes, or other suitable equipment to lower all pipe and fittings into the trench one piece at a time. Carefully lower each piece so that neither it nor any protective coating or lining it may have will be damaged. Under no circumstances, drop or dump force main materials into the trench.

1. Lower no pipes and fittings into the trench until they have been swabbed to remove any mud, debris, etc., that may have accumulated within them. After the pipe has been lowered, remove all unnecessary materials from it. Before any pipe is laid, brush and wipe clean the outside of its spigot end and the inside of its bell and ensure that the pipe is dry and oil-free.
2. Take every precaution to keep foreign material from getting into the pipe while it is being placed in the line. If the crew laying the pipe cannot put it into the trench and in place without allowing earth to get inside it, then place a heavy, tightly woven canvas bag of suitable size over each end of the pipe and leave it there until it is time to connect that pipe to the one adjacent to it.
3. Place no debris, tools, clothing, or other materials in the pipe during laying operations.

E. Bell holes shall be big enough so that there is ample room for the pipe joints to be properly made. Between bell holes, carefully grade the bottom of the trench so that each pipe barrel will rest on a solid foundation for its entire length.

F. Whenever pipe laying is not in progress, close the open ends of pipe in the trench with a watertight plug or by other means approved by the Owner. Caulk the joints of any pipe in the trench that cannot be completed until a later time with packing in order to make them as watertight as possible; this shall be done not only at the end of each working day but also before work is stopped for lunch periods, bad weather, or any other reason. If there is water in a trench, this seal shall remain in place until the trench has been pumped completely dry.

G. The cutting of pipe so that fittings or closure pieces can be inserted shall be done in a neat and workmanlike manner and without any damage to the pipe. Follow the manufacturer's recommendations concerning how to cut and machine the ends of the pipe in order to leave a smooth end at right angles to the pipe's axis.

1. The flame cutting of pipe by means of an oxyacetylene torch will not be allowed.

H. Unless otherwise directed by the Owner, lay pipe with the bell ends facing in the direction of laying.

I. Wherever pipe must be deflected from a straight line (in either the vertical or horizontal plane) in order to avoid obstructions or plumb stems, or wherever long radius curves are permitted, the amount of deflection shall not exceed that necessary for the joint to be satisfactorily made, nor that recommended by the pipe manufacturer, and shall be approved by the Owner.

J. Lay no pipe in water or when it is the Owner's opinion that trench conditions are unsuitable. If crushed stone is used to improve trench conditions or as backfill for bedding the pipe, this shall be considered incidental to the project, and no separate payment will be made for its use.

© 2012 City of Franklin, Tennessee. All rights reserved.

K. When required, utility warning tape and detection wire shall be buried below the surface and directly above pipe as specified in Division 33 sections.
   1. For all non-metallic piping installations, install continuous underground detection wire. Affix wire to top of pipe prior to backfilling. Wire shall be stripped and tied to valves for continuity.
   2. For all underground piping installations, install continuous underground non-detectable warning tape during backfilling of trench.
      a. Installation of non-detectable tape shall be per manufacturer's recommendations and shall be as close to the grade as is practical for optimum protection. Allow a minimum of 24 inches between the tape and the utility line. Allow a minimum of 6 inches between the tape and the ground surface.

L. Install piping by trenchless methods, where indicated on the Drawings, in accordance with Division 33 Section "Trenchless Installation of Utilities".

M. Install underground piping with restrained joints at horizontal and vertical changes in direction. Use restrained joint piping, thrust blocks, anchors, mechanical joint restraint, tie-rods and clamps, and other supports.
   1. Install thrust blocks wherever the pipe line changes direction (e.g., at tees and bends), at dead ends, or at any other point where the manufacturer recommends and/or the Owner indicates that they are to be used.

N. Contractor shall adhere to the requirements of Division 31 Section "Earthwork" for installation and backfilling.
   1. Begin backfilling after the line construction is completed and then inspected and approved by the Owner. On each side of the line, from the bottom of barrel to 1 foot above the top of the pipe, the backfill material shall be select backfill consisting of either of fine, loose earth like sandy soil or loam or of granular material that is free from clods, vegetable matter, debris, stone, and/or other objectionable materials and that has a size of not more than 2 inches. Place this backfill simultaneously on either side of the pipe in even layers that before compaction, are no more than 6 inches deep. Thoroughly and completely tamp each layer into place before placing additional layers. At locations beneath or closely adjacent to pavement this backfill shall consist of No. 67 (TDOT) crushed stone.
   2. If pipe is installed in a rock trench, install a 6 inches bedding of No. 67 (TDOT) crushed stone. Then add additional No. 67 (TDOT) stone backfill up to 1 foot above the top of the pipe as shown on the plans.
   3. From 1 foot above the pipe upward, the backfill material may contain broken stones that make up approximately 3/4 of the backfill's total volume. However, if this type of backfill is used, there must be enough spalls and earth materials to fill all voids completely. The maximum dimension of individual stones in such backfill shall not exceed 6 inches, and the backfill material shall be placed and spread in even layers not more than 12 inches deep. At locations beneath or closely adjacent to pavement or at locations of improvements subject to damage by displacement the backfill shall be entirely No. 67 (TDOT) crushed stone. Tamp and thoroughly compact the backfill in layers that, before compaction, are 6 inches deep. In other areas, the backfill for the upper portion of the trenches may be placed without tamping but shall be compacted to a density equivalent to that of adjacent earth material as determined by laboratory tests. Use special care to prevent the operation of backfilling equipment from causing any damage to the pipe.

© 2012 City of Franklin, Tennessee. All rights reserved.

4. Wherever pipes have diameters of 15 inches or less, do not use power operated tampers to tamp that portion of the backfill around the pipe within 1 foot above the pipe.
5. Perform backfilling so as not to disturb or injure any pipe and/or structure against which the backfill is being placed. If any pipe or structure is damaged and/or displaced during backfilling, open up the backfill and make whatever repairs are necessary.
6. Backfilling and clean-up operations shall closely follow pipe laying; failure to comply with this provision will result in the Owner's requiring that the Contractor's other activities be suspended until backfilling and clean-up operations catch up with pipe laying.

O. Install line markers directly above pipeline alignment at intervals of 1,000 feet where indicated on the Drawings. Line markers shall be installed after final clean-up is completed.

3.5 CONCRETE VAULT INSTALLATION

A. Concrete vaults shall be rectangular or circular, either precast or cast-in-place reinforced concrete, of the dimensions and specifications noted on the Drawings. Concrete shall have a 28-day compressive strength of 4000 psi. Circular precast concrete barrel sections for valve vaults shall conform to ASTM C478 except sections deeper than 12 feet shall have reinforcing equal to that ASTM C76 Class III reinforced concrete pipe unless otherwise noted on the Drawings.

B. Precast section joints shall be mortared or grouted; joined with ASHTO M-198-75 preformed flexible butyl type joint sealant. Joints should be water tight
   1. Manufacturer / Model:
      a. Hamilton-Kent “Kent-Seal No. 2”,
      b. K.T. Snyder Company “rub ‘r-Nek”,
      c. Press Seal Gasket “E-Z Stik”, or
      d. Approved equal.

C. Concrete Vault Hatch
   1. Channel frame shall be 1/4 inch (7 mm) thick extruded aluminum with a mill finish, incorporating a continuous concrete anchor. A 1-1/2 inch (38 mm) drainage coupling shall be located in the front left corner of the channel frame. A bituminous coating shall be applied to the frame exterior where it will come into contact with concrete. The entire frame must be supported by a full bed of Class A concrete (H-20 load rating).
   2. The door panel(s) shall be 1/4 inch (7 mm) aluminum diamond plate, reinforced to withstand a live load of 300 psf or H-20 uniform live load with a maximum allowable deflection of 1/150 of the span and shall not protrude into the channel frame when in the open position. In grassed or landscaped (non-traffic) areas the access door shall be designed for 300 psf loading. In areas that may receive light vehicle traffic, such as sidewalks or edges of parking lots, the access door shall be designed for H-20 wheel loading.
   3. Doors shall open to 90 degrees and automatically lock with a T-316 stainless steel hold open arm with an aluminum release handle. For ease of operation, the door hold open arm shall incorporate an enclosed stainless steel compression spring assist.
   4. Doors shall close flush with the frame and rest on a built-in neoprene cushion/gasket (300 psf load rating).

© 2012 City of Franklin, Tennessee. All rights reserved.

5. Hinges and all fastening hardware shall be T-316 stainless steel.
6. Unit shall lock with a T-316 stainless steel slam lock with removable key and have a non-corrosive handle.
7. Unit shall carry a lifetime guarantee against defects in material and/or workmanship.
8. Manufacturer / Model:
   a. Halliday Products, Inc., Orlando, Florida, Series W2C (double leaf), or
   b. Approved equal.

D. Ladder/Steps:
1. Ladder/steps shall be steel encased in copolymer polypropylene plastic (or equal), "Press Fit" type, have an overall width of 12 inches, and spaced at 12 inches.
2. Manufacturer:
   a. M.A. Industries, or
   b. Approved equal.

E. A vent shall be provided in the top of the vault. The vent shall be constructed of PVC, a minimum of 3 feet tall, and a minimum of 4-inches in diameter with a 24 mesh stainless steel screen. The vent shall be located such that it does not interfere with the opening/closing of the hatch or impede access to the vault interior. The vault penetration shall be a thrust collar wall pipe cast integrally into the vault top. The vent shall be flanged and bolt to the wall sleeve.

F. Pipe Penetrations shall be water tight and sealed in the vault wall opening with flexible and/or rigid connections. At least one pipe penetration shall be a rigid connection.
1. Flexible connections shall be provided using resilient connectors meeting the requirements of ASTM C-923. Resilient connectors shall be compression type cast integrally into the vault wall.
   a. Manufacturer:
      1) A-Lok Products, Inc., Tullytown, PA, or
      2) Approved equal.
2. Rigid Connections shall be provided using a thrust collar wall pipe. Thrust collar wall pipes shall be cast integrally into the vault wall. Thrust collar wall pipes shall meet the requirements of ductile iron flanged piping, as specified herein, unless otherwise specified.
   a. Manufacturer:
      1) U.S. Pipe,
      2) American Ductile Iron Pipe, or
      3) Approved equal.

G. Vault Drainage:
1. Vault drainage shall be as noted on the Drawings and according to the following.
   a. Drain pipe shall be schedule 80 PVC and penetrate the wall at floor level. Slope of drain line shall be in accordance with local plumbing codes. A varmint screen shall be installed on the drain line inside the vault for ease of maintenance. A flap valve shall be installed on the drain line discharge.
   b. The vault floor shall have a sump with a minimum depth of 12-inches and a minimum inside diameter of 14-inches. The sump is not required to be cast integrally in the floor of precast vaults. However, the seal between the vault and the sump shall be watertight and no part of the sump will be allowed to extend above the floor thereby inhibiting drainage. The sump shall be concrete or HDPE.

© 2012 City of Franklin, Tennessee. All rights reserved.

1) The sump pump shall be automatic with level operation. It shall operate on 115 volt, single phase, 60 hz power. The pump shall be 1/3 horsepower and pump a maximum flow of 30 gpm at 10-feet of head with a 1-1/2 inch discharge.
2) Manufacturer / Model:
   a) Water Ace Model R3V, or
   b) Approved equal.

H. Vault electrical, if any, shall be in accordance with the requirements of the Specifications and Drawings.

I. Vault Piping:
1. Piping shall be supported with column type pipe saddle supports, concrete block, or other Owner-approved method.
   a. Column type pipe saddle supports shall be stanchion type with vertical adjustability and U-bolt attachment to pipe. The stanchion shall be properly sized to carry the pipe load. The saddle assembly and base shall be cast iron or carbon steel.
      1) Manufacturer:
         a) Grinnell Corporation, Providence, RI, or
         b) Approved equal.
   b. Concrete pipe supports shall be full or half-size, solid CMU placed under pipe, valves, meters, etc. flanges or under flanged base bends. Flanged base bends shall be bolted to the concrete pipe support.
2. Piping shall be insulated in accordance with Paragraph 2.8 subparagraphs a and c and/or have heat tape.

J. Valves shall be in accordance with Division 33 Section "Valves"

K. Manufacturer:
1. Cloud Concrete Products of Nashville, Inc, or
2. Approved equal

3.6 FIELD QUALITY CONTROL

A. Cleanup: Contractor is required to grade and clean all areas affected by the installation and backfilling of the pipe trench. The Contractor shall do this work within the following constraints:
1. At a minimum:
   a. No earlier than 2 weeks of pipe trench backfilling; and,
   b. No later than 10,000 feet of additional pipe installation.
2. At a maximum:
   a. No later than 3 weeks of pipe trench backfilling.

B. Piping Tests: Conduct piping tests after thrust blocks have hardened sufficiently. Fill pipeline 24 hours before testing and apply test pressure to stabilize system. Use only potable water. Conduct tests in accordance with AWWA C600 for ductile iron.

© 2012 City of Franklin, Tennessee. All rights reserved.

Piping Test Methods Table

Procedure	Pressure	Duration of Test
Simultaneous Pressure And Leakage Tests	150% of working pressure* at point of test, but not less than 125% of normal working pressure at highest elevation. †	2 h
Separate Pressure Test	150% of working pressure* at point of test, but not less than 125% of normal working pressure at highest elevation. †	1h
Separate Leakage Test	150% of working pressure* of segment tested. †	2h

* Working pressure is defined as maximum anticipated sustained operating pressure.
† In no case shall the test pressure be allowed to exceed the design pressure for pipe, appurtenances, or thrust restraints.

1. Pressure Tests:
   a. Slowly fill each valved section of pipe with water, and apply the specified test pressure (based on the elevation of the lowest point of the line or section under test and corrected to the elevation of the test gauge) with a pump connected to the pipe in a manner satisfactory to the Owner. Furnish the pump, pipe, connections, gauges, and all necessary apparatus.
   b. Before applying the specified test pressure, expel all air from the pipe. If air release valves are not available at high points, make the necessary taps at the point of highest elevation before testing, and insert plugs after the test has been completed.
   c. Carefully examine all exposed pipe, fittings, valves, and air release valves during the test. Remove any cracked or defective pipes, fittings, valves, or air release valves discovered in consequence of this pressure test, and replace with sound material in the manner specified. Repeat the test until the results are satisfactory to the Owner/Engineer.
2. Leakage Tests:
   a. Leakage is defined as the amount of water which must be supplied to the newly laid pipe or any valved section in order to maintain the specified leakage test pressure within 5 psi after pipe has been filed with water and the air expelled.
   b. For pipe, allowable leakage is defined as:

$$L = \frac{ND\sqrt{P}}{7,400}$$

Where: L = allowable leakage, in gallons per hour
N = number of joints in length of pipeline tested
D = nominal diameter of the pipe, in inches
P = average test pressure during the leakage test, in pounds per square inch (gauge)

When testing against closed metal-seated valves, an additional leakage per closed valve of 0.078 GPH/in. of nominal valve size shall be allowed.

© 2012 City of Franklin, Tennessee. All rights reserved.

ALLOWABLE LEAKAGE PER 50 JOINTS OF PVC PIPE* - GPH[H]

Avg. Test Pressure	Nominal Pipe Diameter - *in.*											
psi	**4**	**6**	**8**	**10**	**12**	**14**	**16**	**18**	**20**	**24**	**30**	**36**
250	0.43	0.64	0.85	1.07	1.28	1.50	1.71	1.92	2.14	2.56	3.21	3.85
225	0.41	0.61	0.81	1.01	1.22	1.42	1.62	1.82	2.03	2.43	3.04	3.65
200	0.38	0.57	0.76	0.96	1.15	1.34	1.53	1.72	1.91	2.29	2.87	3.44
175	0.36	0.54	0.72	0.89	1.07	1.25	1.43	1.61	1.79	2.15	2.68	3.22
150	0.33	0.50	0.66	0.83	0.99	1.16	1.32	1.49	1.66	1.99	2.48	2.98
125	0.30	0.45	0.60	0.76	0.91	1.06	1.21	1.36	1.51	1.81	2.27	2.72
100	0.27	0.41	0.54	0.68	0.81	0.95	1.08	1.22	1.35	1.62	2.03	2.43

* If the pipeline under test contains sections of various diameters, the allowable leakage will be the sum of the computed leakage for each size.
H Calculated on the basis of leakage equation.

1) For ductile iron pipe, allowable leakage is defined as:

$$L = \frac{SD\sqrt{P}}{133{,}200}$$

Where:
- L = allowable leakage, in gallons per hour
- S = length of pipe tested, in feet
- D = nominal diameter of the pipe, in inches
- P = average test pressure during the leakage test, in pounds per square inch (gauge)

When testing against closed metal-seated valves, an additional leakage per closed valve of 0.0078 GPH/in. of nominal valve size shall be allowed.

ALLOWABLE LEAKAGE PER 1000 FEET OF PIPELINE* - GPH[H]

Avg. Test Pressure	Nominal Pipe Diameter – *in.*												
psi	**3**	**4**	**6**	**8**	**10**	**12**	**14**	**16**	**18**	**20**	**24**	**30**	**36**
250	0.36	0.47	0.71	0.95	1.19	1.42	1.66	1.90	2.14	2.37	2.85	3.56	4.27
225	0.34	0.45	0.68	0.90	1.13	1.35	1.58	1.80	2.03	2.25	2.70	3.38	4.05
200	0.32	0.43	0.64	0.85	1.06	1.28	1.48	1.70	1.91	2.12	2.55	3.19	3.82
175	0.30	0.40	0.59	0.80	0.99	1.19	1.39	1.59	1.79	1.98	2.38	2.98	3.58
150	0.28	0.37	0.55	0.74	0.92	1.10	1.29	1.47	1.66	1.84	2.21	2.76	3.31
125	0.25	0.34	0.50	0.67	0.84	1.01	1.18	1.34	1.51	1.68	2.01	2.52	3.02
100	0.23	0.30	0.45	0.60	0.75	0.90	1.05	1.20	1.35	1.50	1.80	2.25	2.70

* If the pipeline under test contains sections of various diameters, the allowable leakage will be the sum of the computed leakage for each size.
H Calculated on the basis of Eq. 1.

2) For HDPE, allowable leakage is zero.

© 2012 City of Franklin, Tennessee. All rights reserved.

3) Should any test of pipe laid disclose leakage greater than that specified, the Contractor shall, at his own expense, locate and repair the defective joints until the leakage is within the specified allowance.

3. Prepare reports of all pressure and leakage test activities.
4. No additional payment shall be made for pressure testing, leakage testing, water, flushing, taps for testing, equipment or other items necessary to perform testing.

END OF SECTION

© 2012 City of Franklin, Tennessee. All rights reserved.

PART 1 - GENERAL

1.1 RELATED DOCUMENTS

A. Drawings and general provisions of the Contract, including General and Supplementary Conditions and other Division 01 Specification Sections, apply to this Section.

1.2 GENERAL REQUIREMENTS

A. Manholes shall be placed no further than 400' apart; 500' apart for pipes 24" and larger.

B. The end of each line, change in grade or size, change in alignment, or intersection of two (2) or more mains.

C. All manholes shall be adjusted to final grades.

D. Manholes located within the floodplain or areas known to flood shall have watertight manhole covers.

E. Minimum diameter shall be 48-inches and larger sizes will be required as shown in the following table:

MANHOLE SIZES		
SEWER MAIN (inches)	**MAXIMUM BRANCH SIZE** (inches)	**MANHOLE SIZE** (inches)
8 - 15	10	48
18 - 24	12	60
24 - 36	15	72
Greater than 36	TBD by WMD	TBD by WMD

F. Ventilation of gravity wastewater mains should be considered where continuous watertight sections greater than 1,000 feet are incurred. The height of the vent pipe opening shall be a minimum of 1 foot above the 100 year flood plain elevation.

G. Manholes shall be precast with eccentric cones unless otherwise approved by the WMD.

H. Manholes shall be fiberglass when entered by a force main. Fiberglass manhole manufacturers shall be approved by the WMD.

I. Dog House manholes shall be used only with the permission of the City of Franklin Water Management Department.

© 2012 City of Franklin, Tennessee. All rights reserved.

J. Refer to other sections for items affecting manholes. Coordinate this work with that specified by other sections for timely execution.

1.3 QUALITY ASSURANCE

A. Material Testing: All precast reinforced concrete manhole risers and tops specified herein shall be tested and inspected by a commercial testing laboratory approved by the Owner prior to delivery to the site, and all materials that fail to conform to these specifications shall be rejected. After delivery to the site, any materials that have been damaged in transit or are otherwise unsuitable for use in the work shall be rejected and removed from the site.

B. The commercial testing laboratory shall be engaged and paid for by the Contractor.

C. Manholes shall be watertight and of high quality.

1.4 SUBMITTALS

A. Shop drawings are required for castings, plastic gaskets, manhole steps, resilient pipe connection, and precast manholes specified in this section.

B. Supply certified copies in duplicate for the inspection and acceptance reports of the testing laboratory to the Owner before using the materials.

C. Submit a certificate from the manufacturer of the castings indicating that they meet all applicable requirements of these specifications.

PART 2 - PRODUCTS

2.1 CONCRETE MASONRY

A. Reinforced.

2.2 STEEL TRAFFIC GRADE ADJUSTMENT RING (FOR CASTING ADJUSTMENT)

A. Grade rings shall only be used with the approval of the Water Management Department.

B. Adjustment rings shall conform to ASTM A48, Class 30, material specifications. The adjustment ring shall be of a traffic design and no more than 2-inches in height. The extension ring shall be No. 2500 as manufactured by John Bouchard & Son, Company, or equal. Reinforced concrete adjustment rings may also be allowed.

2.3 MORTAR

A. Composed of one part Portland cement and two parts sand (volumetric measure) thoroughly mixed in a tight box, with water added gradually and mixed continually until mortar has attained the proper consistency for use in the work; prepared only in such quantities as needed for immediate use; mortar mixed for more than 30 minutes, re-tempered, or previously set will not be allowed.

© 2012 City of Franklin, Tennessee. All rights reserved.

2.4 GRAY IRON CASTINGS

A. Cast iron conforming to the requirements of Class 30, ASTM A48; made accurately to the required dimensions; sound, smooth, clean, and free from blisters and other defects; not plugged or otherwise treated to remedy defects; machined so that covers rest securely in the frames with no rocking and are in contact with frame flanges for the entire perimeter of the contact surfaces; thoroughly cleaned subsequent to machining and, before rusting begins, painted with a bituminous coating so as to present a smooth finish; tough and tenacious when cold, but not tacky and with no tendency to scale; and with the actual weight in pounds stenciled or printed by the manufacturer on each casting in white paint.

2.5 STANDARD FRAME AND COVER

A. The standard frame and cover shall be traffic typed gray cast iron ASTM Designation A48 - Latest Revision, with a 24-inch (minimum) diameter opening weighing not less than 410 pounds. The covers shall be the solid self- sealing type with no holes except watertight pick notches. The surface between the cover and frame shall fit smoothly without rocking and shall be thoroughly cleaned. The gray iron castings shall be painted with a bituminous coating.

B. Cover shall be of the solid indented type with the words "Sanitary Sewer" cast in raised letters thereon. Manhole frames and covers shall be John Bouchard and Sons No. 1155 or approved equal.

2.6 WATERTIGHT MANHOLES FRAMES AND COVERS

A. The manhole frames shall be set in the same manner prescribed for standard frames except special attention shall be paid to securing a watertight bolted connection to the manhole barrel.

B. The watertight manhole frame and cover shall be a traffic type of grey cast iron ASTM A48-64 with a 24 inch diameter minimum clear opening weighing not less than 550 pounds and shall be of the two-cover design as shown on the Plans.

The surface cover shall be the solid type with no holes except watertight pick notches or a heavy lifting ring. The surface between this cover and frame shall fit without rocking. The inner cover shall be of the solid type with no holes, shall have not less than two lifting handles and shall have a neoprene sealing gasket at last 3/8 inch diameter cross-section. The inner cover shall be mechanically sealed by means of a removable metal bar located over the inner cover with a centrally-located stainless steel tightening bolt. This bolt shall be fitted for a tee-handle or bent-handle for turning which shall be included with each cover. The bolt shall have Acme threads for durability and coaxed with an anti-seize compound. The inner cover shall have appropriate reinforcing ribs to prevent cracking or distortion when tightened. The inner cover shall have sufficient clearance to allow easy installation of the cover. Manhole frame and cover shall be John Bouchard and Sons No. 1123 or approved equal.

2.7 MANHOLE JOINT SEALANT FOR PRECAST MANHOLES

A. Flexible plastic sealant for joints in pre-cast manhole sections shall provide permanently flexible watertight joints, shall remain workable over wide temperature range and shall not shrink, harden or oxidize upon aging. Material shall be butyl resin sealant ConSeal CS-102 or CS-202 as manufactured by Concrete Sealants, Inc. of New Carlisle, Ohio, RUB'R-NEK

© 2012 City of Franklin, Tennessee. All rights reserved.

L-T-M manufactured by K.T. Snyder Company, Inc. of Houston, Texas, or other approved equal.

2.8 MANHOLE JOINT WRAP

A. Joint wrap, at all joints between riser sections, shall be installed in accordance with ASTM C909. Joint wrap shall be 6-inch minimum width, and as manufactured by Press-Seal Gasket Corporation of Fort Wayne, Indiana, or equal.

2.9 BUTYL MASTIC SEALANT

A. The sealant shall be used when joining the casting frame to the precast manhole and for all manhole adjustments to provide watertight structure. The sealing compound shall be produced from blends refined hydrocarbon resins and plasticizing compounds reinforced with inert mineral filler, and shall contain no solvents, irritating fumes, or obnoxious odors. The compound shall not depend on oxidizing, evaporating, or chemical action for its adhesive or cohesive strength. It shall be supplied in extruded rope form of suitable cross section and in such sizes as to seal the joint space. Use two complete ropes at each joint. The sealing compound shall be protected by a suitable removable two-piece wrapper, which shall be designed so that half may be removed longitudinally without disturbing the other half in order to facilitate application of the sealing compound. The sealant shall also meet the requirements of the following table:

Composition	Test Method	Minimum	Maximum
Bitumen (Petroleum Plastic Content	ASTM D4	50	70
Ash Inert Mineral Matter	AASHTO T11	30	50
Volatile Matter	ASTM D6	---	2.0
Property	Test Method	Minimum	Maximum
Specific Gravity at 77 degrees F	ASTM D71	1.2	1.3
Ductility at 77 degrees F(cm)	ASTM D113	5.0	---
Softening Point	ASTM D36	320 degrees F	---
Penetration 77 degrees F (150 gms) 5 sec.	ASTM D217	50	120

2.10 MANHOLE STEPS

A. Manhole steps shall be made of copolymer polypropylene plastic meeting the latest revision of ASTM D4101-08, Type II, Grade 16906 and shall have a 1/2 inch diameter Grade 60 reinforcing rod meeting the latest revision of ASTM A615 through its center. Each step shall be 12 inches in width and capable of carrying a load of 1,000 pounds in the center of the step when projected 6 inches from the wall. Each step shall be equipped with non-skid grooves.

2.11 MANHOLE INVERTS

A. Manhole inverts shall be formed from 2,000 psi concrete. Inverts for "Straight-through" manholes may be formed by laying the pipe straight through the manhole, pouring the concrete invert and then breaking out the top half of the pipe. Curved inverts shall be constructed of concrete and shall form a smooth even, half-pipe section as shown on the Plans. The inverts shall be constructed when the manhole is being built.

© 2012 City of Franklin, Tennessee. All rights reserved.

B. The bench or top portion of the invert shall slope to the flow line to prevent standing water.

C. Services within the manhole, higher than 2 foot above the manhole invert, shall be constructed of an outside drop structure.

2.12 RESILIENT PIPE CONNECTIONS AT MANHOLES

A. Resilient pipe connectors shall be manufactured in accordance with ASTM C923 and shall provide a positive watertight joint and minimum of 10 degrees deflection in any direction. There shall be no water leakage through the connector when pipe is in its maximum deflected position. Connectors shall be manufactured of durable construction. Connectors shall be manufactured of durable rubber which offers superior resistance to water, sewage, oils, acid, ozone, weathering and aging. Conical type flexible boot of the proper size to match the OD of the connection pipes shall be clamped securely to the cut out in the manhole wall and to the pipe by means of stainless steel clamps or bands. The void area between the pipe and the connector shall be sealed with an approved flexible gasket material. The flexible boot shall meet ASTM C443. Connectors shall be as manufactured by the KOR-N-SEAL Company of Milford, New Hampshire, Press-Boot by Press-Seal Gasket Corporation of Fort Wayne, Indiana, or equal.

B. Compression-type connectors cast integrally into the manhole wall shall be equivalent to the A-Lok Manhole Pipe Connector as manufactured by A-Lok Products, Inc. Compression-type connectors shall only be used when specifically called for on the drawings.

2.13 PRE-CAST CONCRETE MANHOLES

A. Precast manholes shall be constructed on a reinforced concrete foundation and shall be wet cast as modified herein. The bottom section of the manhole shall be precast integrally with the precast ring and shall be 4'-0" in diameter. All concrete used in connection with the construction of manholes shall be 4,000 psi concrete. Wet cast precast manholes shall be Sherman Dixie, Inc. or equivalent.

B. The precast manhole manufacturer shall use the additive Xypex Concentrate Admix C-2000/C-1000 at the rate of 2-3 percent by weight of cement in the concrete mix for all manholes. The Xypex Concentrate Admix must be added to the concrete at the time of batching as recommended by the manufacturer (Xypex Chemical Corporation, Richmond, British Columbia, Canada, local contact (615) 333-1000).

C. Precast concrete rings shall be constructed using standard forms and shall conform to ASTM C478 including steel reinforcement.

D. The precast sections shall be manufactured and installed in a manner so that there is no visible leakage in the manholes. The manhole section shall be manufactured in lengths such that a finished manhole will have the least possible number of joints. One section less than four feet in length will be allowed per manhole and that being the section required to bring the manhole to grade. No more than 1 foot of riser rings may be used in total. The precast rings shall be of the tongue and groove design sealed watertight, and the joint shall be grouted smooth on the inside of the manhole so that no crack is visible. A resilient pipe connection shall be utilized in the sewer line to manhole connection, unless specifically noted on the drawings.

© 2012 City of Franklin, Tennessee. All rights reserved.

E. The manhole sidewall shall be adjusted with xypex protected concrete grade adjustment rings as required to bring the casting to grade.

PART 3 - EXECUTION

3.1 PREPARATION

A. Dewater sufficiently to maintain the ground water level at or below the bottom of the manhole foundation prior to and during placement of the foundation.

B. Obtain an adequate foundation for all manhole structures by removing and replacing unsuitable material with well graded granular material, by tightening with coarse rock, or by such other means as provided for foundation preparation of the connected sewers or as directed by the Owner. Wherever water is encountered at the site, place all cast in place bases or monolithic structures on a one-piece waterproof membrane to prevent any movement of water into the fresh concrete.

3.2 INSTALLATION

A. When the foundation subgrade has been prepared and is approved by the Owner, carefully construct the concrete foundation for monolithic manholes to the line and grade required by the drawings. Construct the manholes after the concrete foundation has been allowed to set for a period of not less than 24 hours.

B. For precast manholes, carefully block the base section above the prepared surface so that it is fully and uniformly supported in true alignment; make sure that all entering pipe can be inserted at proper grade. Then place the concrete foundation and invert under and upon this base section as shown in the standard drawings. A base section with monolithic foundation (bottom) may be used when approved by the Owner.

C. Thoroughly wet and then completely fill all lift holes and all interior joints between precast elements with non-shrink grout. Smooth them inside to ensure water tightness.

D. Construct monolithic concrete manholes and bases of 4,000 psi concrete in accordance with the provisions of this section. The manhole steps shall be cast in place.

E. Carefully set the cast iron frame for the cover at the required elevation, and properly bond it to the masonry with cement grout. Wherever manholes are constructed in paved areas, tilt the top surface of the frame and cover so as to conform to the exact slope, crown, and grade of the existing adjacent pavement. Existing frames and covers reused for elevation adjustment shall be thoroughly cleaned before reinstallation.

F. Manhole inverts shall be constructed of concrete or mortared masonry fill and may, at the Contractor's option, be covered with cement mortar to the approximate cross section of the sewers connected to them. Make any necessary changes in cross sections gradually from side to side of the manhole; make changes in direction of flow of the sewers to a true curve of as large a radius as is permitted by the size of the manhole.

© 2012 City of Franklin, Tennessee. All rights reserved.

G. Use flexible watertight manhole couplings on all pipes at connections to manholes. Connector shall meet the requirement of ASTM C923. Connector shall be supplied with external stainless steel pipe clamp. Connector shall be Kor-N-Seal or approved equal.

H. Where the difference in the invert elevation of two or more sewers intersecting in one manhole is 24 inch or more, construct a drop manhole. Drop manholes shall be similar in construction to standard manholes except that a drop connection of pipe and fittings of the proper sizes and materials shall be constructed outside the manhole and supported by 3,000 psi concrete as indicated by the standard drawings. Pipe material used in the drop is the same as the service.

I. Place backfill by hand around the manhole and to a distance of at least one pipe length into each trench, and tamp with selected material up to an elevation of 12 inch above the crown of all entering pipes. Continue backfilling in accordance with the requirements for trenching backfilling.

J. Vacuum Testing of New Manholes:
1. All lifting holes shall be filled and pointed with an approved non-shrinking mortar.
2. Manholes are to be tested immediately after assembly and before backfilling. No standing water shall be allowed in the manhole excavation which may affect the accuracy of the test. Adjustments in the manhole will require additional testing.
3. All pipes and other openings into the manhole shall be suitably plugged in such a manner as to prevent displacement of the plugs while the vacuum is drawn.
4. Installation and operation of vacuum equipment and indicating devices shall be in accordance with equipment specifications and instructions provided by the manufacturer.
5. The test head shall be placed to include the manhole casting (frame).
6. A vacuum of 10 inches of mercury shall be drawn. The time for the vacuum to drop to 9 inches of mercury shall be recorded.
7. Acceptance for 4 foot diameter manholes shall be defined as when the time to drop to 9 inches of mercury conforms to the table below. Contractor shall keep a log of all tests which shall be submitted to the Owner for approval.

Manholes Depth	Diameter	Time to Drop 1 Inch Hg
10 feet or less	4 feet	60 seconds
10.1 feet to 15 feet	4 feet	75 seconds
15.1 feet to 25 feet	4 feet	90 seconds

8. For manholes 5 feet in diameter, add an additional 15 seconds and for manholes 6 feet in diameter, add an additional 30 seconds to the time requirements for four foot diameter manholes.
9. If the manhole fails to test, necessary repairs shall be made and vacuum test repeated until the manhole passes the test.
10. If the manhole joint mastic or gasket is displaced during the vacuum test, the manhole shall be disassembled and the seal replaced.
11. No additional payment will be made for testing and cost shall be merged into cost of manholes.

© 2012 City of Franklin, Tennessee. All rights reserved.

3.3 ACCEPTANCE TEST FOR EXISTING MANHOLE GRADE ADJUSTMENT

A. After the manhole has been adjusted to the proper grade, the manhole shall be visually inspected and retested by the Contractor in the presence of the Resident Project Representative. Any defects noted shall be corrected by the Contractor until the work is found satisfactory to the Resident Project Representative. In addition, at the Owner's request, the Contractor may be required within one year to visually inspect the manholes that were adjusted. Any work that has become defective shall be redone by the Contractor at no additional expense to the Owner.

END OF SECTION

© 2012 City of Franklin, Tennessee. All rights reserved.

PART 1 - GENERAL

1.1 GENERAL DESCRIPTION

A. The manufacturer shall furnish complete Grinder Pump Station(s), consisting of a grinder pump, a tank constructed of high density polyethylene, NEMA 6P electrical quick disconnect, pump removal system, discharge piping assembly with shut-off valve, anti-siphon valve, check valve, electrical alarm panel, and all necessary internal wiring and controls. All pump motor/grinder units shall be of like type and horsepower throughout the system.

B. Prior to design of a low pressure sewer system, a meeting with the City of Franklin Engineer Department to determine the applicability of this type of system is required.

1.2 SHOP DRAWINGS

A. The manufacturer shall furnish a minimum of six (6) sets of shop drawings detailing the equipment to be furnished including dimensional data and materials of construction. The Engineer shall review this data, and return two (2) copies as accepted, or with requested modifications. Upon the Engineer's acceptance of the shop drawings and the manufacturer's receipt of notice to proceed, the manufacturer shall begin fabrication of the equipment.

1.3 MANUFACTURER

A. Grinder pump stations, complete with all appurtenances, shall be supplied by one grinder pump station manufacturer. The contractor shall be responsible for the operation of the entire system. The equipment specified shall be a product of a company experienced in the design and manufacture of grinder pumps for specific use in low pressure sewage systems. The company shall submit detailed installation and user instructions for its product, submit evidence of an established service program including complete parts and service manuals, and be responsible for maintaining a continuing inventory of grinder pump replacement parts. The manufacturer shall provide a reference and contact list from five (5) of its largest contiguous grinder pump installations of the type of grinder pumps described within this specification.

B. The Manufacturer/Model of the grinder pump station shall be Environment One Corporation/DH071, or approved equivalent.

C. Attention is directed to the fact that the drawings and overall system design are based on a particular piece of equipment from a particular manufacturer. These specifications are intended to provide guidelines for standard equipment of a recognized manufacturer who already meets all the requirements of this specification.

1.4 OPERATING CONDITIONS

A. The pump(s) shall be capable of delivering 15 GPM against a total dynamic head of 0 feet (0 PSIG) and 9 GPM against a total dynamic head of 138 feet (60 PSIG) at a

© 2012 City of Franklin, Tennessee. All rights reserved.

maximum of 8.0 amps. The pump(s) must also be capable of operating at negative total dynamic head without overloading the motor(s). Under no conditions shall in-line piping or valving be allowed to create a false apparent head.

1.5 WARRANTY

A. The grinder pump manufacturer shall provide a part(s) and labor warranty on the complete station, accessories and control panel for a period of twelve (12) months from the date of acceptance. Any manufacturing defects found during the warranty period will be reported to the manufacturer by the City.

1.6 WARRANTY PERFORMANCE CERTIFICATION

A. As a pre-construction requirement, the Contractor shall provide a Warranty Performance Certification statement executed by the most senior executive officer of the grinder pump manufacturer, which certifies a minimum of a twelve (12) month warranty. They must further detail any exclusions from the warranty or additional cost items required to maintain the equipment in warrantable condition, including all associated labor and shipping fees, and certify that the manufacturer will bear all costs to correct any original equipment deficiency for the effective period of the warranty. All preventive maintenance type requirements shall be included in this form as exclusions. These requirements include, but are not limited to, unjamming of grinder mechanism, unplugging of lines, periodic motor maintenance, and periodic cleaning of liquid level controls.

PART 2 - PRODUCTS

2.1 PUMP

A. The pump shall be an integral, vertical rotor, motor driven, solids handling pump of the progressing cavity type with a single mechanical seal. The rotor shall be constructed of stainless steel. Plating on the rotor will not be acceptable due to its tendency to delaminate. The stator shall be a compounded ethylene propylene synthetic elastomer. The material shall be suitable for domestic wastewater service. Its physical properties shall include high tear and abrasion resistance, grease resistance, water and detergent resistance, temperature stability, excellent aging properties, and outstanding wear resistance. Buna-N is not acceptable as a stator material.

2.2 GRINDER

A. The grinder shall be placed immediately below the pumping elements and shall be direct-driven by a single, one-piece, stainless steel motor shaft. The grinder impeller assembly shall be securely fastened to the pump motor shaft. The grinder will be of the rotating type with a stamped, stainless steel shredder ring assembly spaced in accurate, close annular alignment with the driven impeller assembly, which shall carry two hardened, 400 series stainless steel cutter bars. This assembly shall be dynamically balanced and operate without vibration over the entire range of specified operating pressures. The grinder shall be constructed so as to eliminate clogging and jamming

© 2012 City of Franklin, Tennessee. All rights reserved.

under all normal operating conditions including pump starting. Sufficient vortex action shall be created to scour the tank free of deposits or sludge banks which would impair the operation of the pump. These requirements shall be accomplished by the following, in conjunction with the pump:

1. The grinder shall be positioned in such a way that solids are fed in an upward flow direction.

2. The maximum flow rate through the cutting mechanism must not exceed 4 feet per second.

3. The inlet shroud shall have a diameter of no less than 5 inches which promotes a ft/sec inlet velocity that prevents unnecessary jamming of the cutter mechanism and eliminates blinding of the pump by large objects blocking the inlet shroud.

4. The impeller mechanism must rotate at a nominal speed of no greater than 1800 rpm.

5. The grinder shall be capable of reducing all components in normal domestic sewage, including a reasonable amount of "foreign objects," such as paper, wood, plastic, glass, rubber and the like, to finely divided particles that will pass freely through the passages of the pump and the 1-1/4" diameter discharge piping.

2.3 ELECTRIC MOTOR

A. The motor shall be a 1 HP, 1725 RPM, 240 Volt 60 Hertz, 1 Phase, capacitor start, ball bearing, air-cooled induction type with a low starting current not to exceed 30 amperes and high starting torque of 8.4 foot pounds. Inherent protection against running overloads or locked rotor conditions for the pump motor shall be provided by the use of an automatic-reset, integral thermal overload protector incorporated into the motor. This motor protector combination shall have been specifically investigated and listed by Underwriters Laboratories, Inc., for the application. Non-capacitor start motors or permanent split capacitor motors will not be accepted. Oil-filled motors will not be accepted.

2.4 MECHANICAL SEAL

A. The pump shall be provided with a mechanical shaft seal to prevent leakage between the motor and pump. The seal shall have a stationary ceramic seat and carbon rotating surface with faces precision lapped and held in position by a stainless steel spring.

2.5 TANK AND INTEGRAL ACCESSWAY

A. Simplex Unit: The tank shall be made of high density polyethylene, with a melt index of 2.0 grams/10 minutes or lower to assure high environmental stress cracking resistance. Corrugated sections are to be made of a double wall construction with the internal wall being generally smooth to promote scouring. Corrugations of the outside wall are to be of a minimum amplitude of 1-½" to provide necessary transverse

© 2012 City of Franklin, Tennessee. All rights reserved.

stiffness. Any incidental sections of a single wall construction are to be a minimum 0.250 inch thick. All seams created during tank construction are to be thermally welded and factory tested for leak tightness. Tank wall and bottom must withstand the pressure exerted by saturated soil loading at maximum burial depth. All station components must function normally when exposed to 150 percent of the maximum external soil and hydrostatic pressure.

B. Duplex Unit: The tank shall be made of rotationally molded high density polyethylene, with a melt index of 2.0 grams/10 minutes or lower to assure high environmental stress cracking resistance. The tank shall have a nominal thickness of ½". All seams created during tank construction are to be thermally welded and factory tested for leak tightness. Tank wall and bottom must withstand the pressure exerted by saturated soil loading at maximum burial depth. All station components must function normally when exposed to 150 percent of the maximum external soil and hydrostatic pressure.

C. The tank shall be furnished with one EPDM grommet fitting to accept a 4.50" OD DWV or Schedule 40 pipe. Tank capacities shall be as shown on the contract drawings.

D. The accessway shall be an integral extension of the wet well assembly and include a lockable cover assembly providing low profile mounting and watertight capability. Accessway design and construction shall enable field adjustment of the station height by adding either 2-inch or 4-inch vertical extensions without the use of any adhesives or sealants requiring cure time before installation can be completed.

E. The accessway shall include a single NEMA 6P electrical quick disconnect (EQD) for all power and control functions, factory installed with accessway penetrations warranted by the manufacturer to be watertight. Plug-type connections of the power cable onto the pump housing will not be acceptable due to the potential for leaks and electrical shorts. The accessway shall also include a 2-inch PVC vent to prevent sewage gases from accumulating in the tank.

F. The station shall have all necessary penetrations molded in and factory sealed. No field penetrations shall be acceptable.

G. All discharge piping shall be constructed of 304 Series Stainless Steel and terminate outside the accessway bulkhead with a stainless steel, 1-¼ inch female NPT fitting. The discharge piping shall include a stainless steel ball valve rated for 200 psi WOG; PVC ball valves will not be accepted. The bulkhead penetration shall be factory installed and warranted by the manufacturer to be watertight.

2.6 CHECK VALVE

A. The pump discharge shall be equipped with a factory installed, gravity operated, flapper-type integral check valve built into the stainless steel discharge piping. The check valve will provide a full-ported passageway when open, and shall introduce a friction loss of less than 6 inches of water at maximum rated flow. Moving parts will be made of a 300 series stainless steel and fabric reinforced synthetic elastomer to ensure corrosion resistance, dimensional stability, and fatigue strength. A nonmetallic hinge

© 2012 City of Franklin, Tennessee. All rights reserved.

shall be an integral part of the flapper assembly providing a maximum degree of freedom to assure seating even at a very low back-pressure. The valve body shall be an injection molded part made of glass filled PVC. Ball type check valves are unacceptable.

B. Each grinder pump installation shall also include one separate check valve of the type detailed above for installation in the 1-1/4" service lateral between the grinder pump station and the sewer main, preferably next to the curb stop.

2.7 ANTI-SIPHON VALVE

A. The pump discharge shall be equipped with a factory-installed, gravity operated, flapper-type integral anti-siphon valve built into the stainless steel discharge piping.

B. Moving parts will be made of 300 series stainless steel and fabric-reinforced synthetic elastomer to ensure corrosion resistance, dimensional stability, and fatigue strength. A nonmetallic hinge shall be an integral part of the flapper assembly, providing a maximum degree of freedom to ensure proper operation even at a very low pressure. The valve body shall be injection-molded from a glass-filled thermoplastic resin. Holes or ports in the discharge piping are not acceptable anti-siphon devices.

2.8 CORE UNIT

A. The Grinder Pump Station shall have an removable core assembly consisting of the pump, motor, grinder, all motor controls, check valve, anti-siphon valve, EQD and wiring. The watertight integrity of the core unit shall be established by 100 percent factory test at a minimum of 5 PSIG.

2.9 CONTROLS

A. All necessary controls, including motor and level controls, shall be located in the top housing of the core unit. The top housing will be attached with stainless steel fasteners. Non-fouling wastewater level controls for controlling pump operation shall be accomplished by monitoring the pressure changes in an integral air column connected to a pressure switch. The level detection device shall have no moving parts in direct contact with the wastewater. High-level sensing will be accomplished in the manner detailed above by a separate air-bell sensor and pressure switch of the same type. Closure of the high-level sensing device will energize an alarm circuit as well as a redundant pump-on circuit. Pump ON/OFF and High level alarm functions shall not be controlled by the same switch. Float switches of any kind, including float trees, will not be accepted.

B. Each core shall be equipped with a pressure equalization chamber. The equalization chamber shall continuously calibrate the level sensing pressure switches to fluctuations in barometric pressure & prevent fluid from entering the control compartment during high water level conditions. The equalization chamber shall be constructed from EPDM, High Impact Polystyrene and stainless steel and measure 12” in diameter by 6” high. The chamber shall be assembled by the core manufacturer and factory tested at

© 2012 City of Franklin, Tennessee. All rights reserved.

the point of assembly to verify proper operation. The grinder pump will be furnished with a 6 conductor, 14 gauge, type SJOW cable, pre-wired and watertight to meet UL requirements with a FACTORY INSTALLED NEMA 6P EQD half attached to it.

2.10 ALARM PANEL

A. Each Grinder Pump Station shall include a NEMA 4X, Alarm Panel suitable for wall or pole mounting. The NEMA 4X enclosure shall be manufactured of corrosion resistant thermoplastic and be furnished with a hinged cover and padlock. The panel shall be installed facing North unless otherwise approved.

B. For each core, the panel shall contain one (1) - 15 amp, double pole circuit breaker for the power circuit and one (1) 15 amp single pole circuit breaker for the alarm circuit. The Alarm Panel shall include a audio and visual alarm, push-to-run switch, and high level (redundant) pump starting control. The visual alarm lamp shall be inside a red fluted lens mounted to the top of the enclosure in such a manner as to maintain NEMA 4X rating. For duplex units, in addition to the above, two high level indicator lights shall be mounted behind the access cover.

1. When liquid level in the sewage wet well rises above the alarm level, visual and audio alarms will be activated. The contacts on the alarm pressure switch will close. The redundant pump starting system will be energized.

2. The audio alarm may be silenced by means of the externally mounted, push-to-silence button.

3. Visual alarm remains illuminated until the sewage level in the wet well drops below the “off” setting of the alarm pressure switch.

C. The control panel shall be equipped with an outside quick disconnect to facilitate usage of a generator during a power outage.

2.11 SERVICEABILITY

A. The grinder pump core unit shall be furnished with polypropylene lifting harness connected to the pump body to facilitate easy removal when necessary. All mechanical and electrical connections must provide disconnect accessibility for core unit removal and installation. All motor control components shall be mounted on a replaceable bracket for ease of field service.

2.12 SAFETY

A. The Grinder Pump Station shall be free from objectionable noise, odor, or health hazards, in its capability to perform as specified in either individual or low pressure sewer system applications.

PART 3 - EXECUTION

© 2012 City of Franklin, Tennessee. All rights reserved.

3.1 FACTORY TEST

A. Each grinder pump shall be submerged and operated for 5 minutes (minimum). Included in this procedure will be the testing of all ancillary components such as the anti-siphon valve, check valve, level sensors and each unit's dedicated controls. All factory tests shall incorporate each of the above listed items. Certified test results shall be available upon request showing the operation of each grinder pump at two (2) different points on its curve, with the maximum discharge pressure no less than 60 psi. The Engineer reserves the right to inspect such testing procedures with representatives of the City, at the grinder pump manufacturer's facility.

3.2 INSTALLATION

A. Earth excavation and backfill are specified under Section 31 0000 "Earthwork", but are also to be done as a part of the work under this section, including any necessary sheeting and bracing. The Contractor shall be responsible for handling ground water to provide a firm, dry subgrade for the structure, and shall guard against flotation or other damage resulting from general water or flooding.

B. The Grinder Pump Stations shall not be set into the excavation until the installation procedures and excavation have been approved by the Engineer.

C. Remove packing material. User instructions MUST be given to the City. Hardware supplied with the unit, if required, will be used at installation. The basin will be supplied with a standard 4" inlet grommet (4.50" OD) for connecting the incoming sewer line. Appropriate inlet piping must be used. The basin may not be dropped, rolled or laid on its side for any reason. Installation shall be accomplished so that 1" to 4" of accessway, below the bottom of the lid, extends above the finished grade line. The finished grade shall slope away from the unit. The diameter of the excavated hole must be large enough to allow for the concrete anchor. A 6-inch (minimum) layer of naturally rounded aggregate, clean and free flowing, with particle size of not less than 1/8" or more than 3/4" shall be used as bedding material under each unit. A concrete anti-flotation collar, as detailed on the drawings, and sized according to the manufacturer's instructions, shall be required and shall be pre-cast to the grinder pump or poured in place. Each Grinder Pump Station with its pre-cast anti-flotation collar shall have a minimum of three (3) lifting eyes for loading and unloading purposes. If the concrete is poured in place, the unit shall be leveled, and filled with water, to the bottom of the inlet, to help prevent the unit from shifting while the concrete is being poured. The concrete must be manually vibrated to ensure there are no voids. If it is necessary to pour the concrete to a level higher than the inlet piping, an 8" sleeve is required over the inlet prior to the concrete being poured. The Contractor will provide and install a four (4) foot piece of four inch SCH 40 PVC pipe with water tight cap, to stub-out the inlet for the property owners' installation contractor, as depicted on the contract drawings.

D. When the grinder pump is being installed at the property with an existing septic tank, the Contractor shall install two (2) knife valves at the point of intercepting the 4-inch diameter service line between the building and the septic tank. The existing septic tank

© 2012 City of Franklin, Tennessee. All rights reserved.

shall remain in an operable condition in case of pump failure. Valve leading to pump shall be tagged accordingly (open/closed).

E. The electrical enclosure shall be furnished, installed and wired to the Grinder Pump Station by the Contractor. An alarm device is required on every installation, there shall be NO EXCEPTIONS. It will be the responsibility of the Contractor to coordinate with the individual property owner(s) to determine the optimum location for the Alarm Panel. The Contractor shall mount the alarm device in a conspicuous location, as per national and local codes. The Alarm Panel will be connected to the Grinder Pump Station by a length of six (6) conductor 12 gauge type TC cable, in conduit where exposed. The power and alarm circuits must be on separate power circuits. The grinder pump stations will be provided with a minimum of 32' (25' of useable electrical supply cable outside the station) to connect to the alarm panel. This cable shall be supplied with a factory installed EQD half to connect to the mating EQD half on the core.

F. Minimum electrical wiring requirements: All LPS electrical systems are to be single phase, 240V AC, 30A, four-wire weatherproof disconnect service. The external NEMA 3 electrical disconnect, installed within five feet (5') of the present location of the sewer line leaving the house to the septic tank, can be fused, non fused or breaker type. The height of the disconnect shall be a minimum of four feet (4') from the grade. The wiring from the main breaker to the disconnect shall be four-wire (two hot, one insulated neutral and one ground wire). The installation of these conductors shall be in conduit where exposed. The permit can be obtained at the Building and Neighborhood Services Department.

3.3 START-UP AND FIELD TESTING

A. The manufacturer shall provide the services of qualified factory-trained technician(s) who shall inspect the placement and wiring of each station, perform field tests as specified herein, and instruct the City personnel in the operation and maintenance of the equipment before the stations are accepted by the City. All equipment and materials necessary to perform testing shall be the responsibility of the installing Contractor. This will include, as a minimum, a portable generator (if temporary power is required) and water in each basin. The services of a trained factory-authorized technician shall be provided at a rate of one (1) four (4) day week for each 100 grinder pump stations supplied. Each day shall be ten (10) person hours in duration.

B. Upon completion of the installation, the authorized factory technicians will perform the following test on each station:

1. Make certain the discharge shut-off valve is fully open. This valve must not be closed when the pump is operating. In some installations, there may be a valve(s) at the street main that must also be open.
2. Turn ON the alarm power circuit.
3. Fill the tank with water to a depth sufficient to verify the high level alarm is operating. Shut off water.

© 2012 City of Franklin, Tennessee. All rights reserved.

4. Close the pump power circuit breaker. The pump should immediately turn ON. Within one (1) minute the alarm light will turn OFF. Within three (3) minutes the pump will turn OFF.
5. Drawdown Test.

C. Upon completion of the start-up and testing, the manufacturer shall submit to the City the start-up authorization form describing the results of the tests performed for each Grinder Pump Station. Final acceptance of the system will not occur until authorization forms have been received for each pump station installed and all installation deficiencies have been corrected.

3.4 OPERATION AND MAINTENANCE

A. MANUALS: The manufacturer shall supply two (2) copies of Operation and Maintenance Manuals to the Owner.

END OF SECTION

© 2012 City of Franklin, Tennessee. All rights reserved.

DETAILS

© 2012 City of Franklin, Tennessee. All rights reserved.

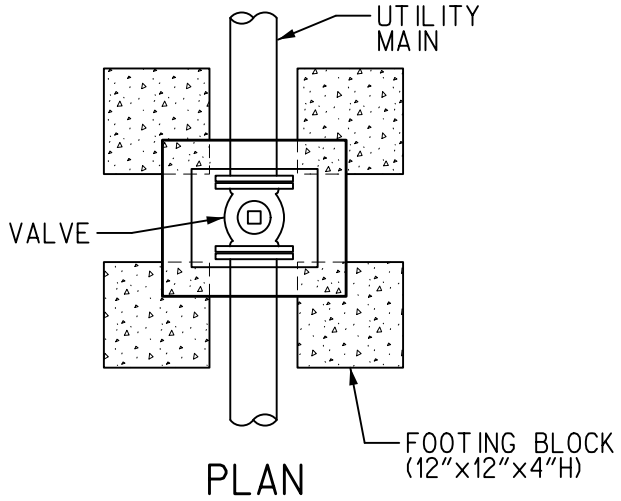

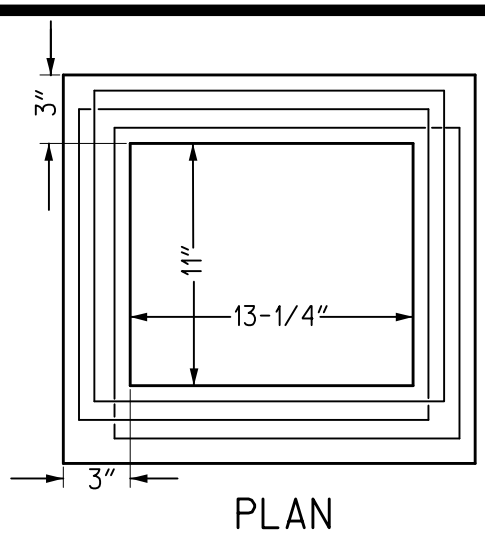

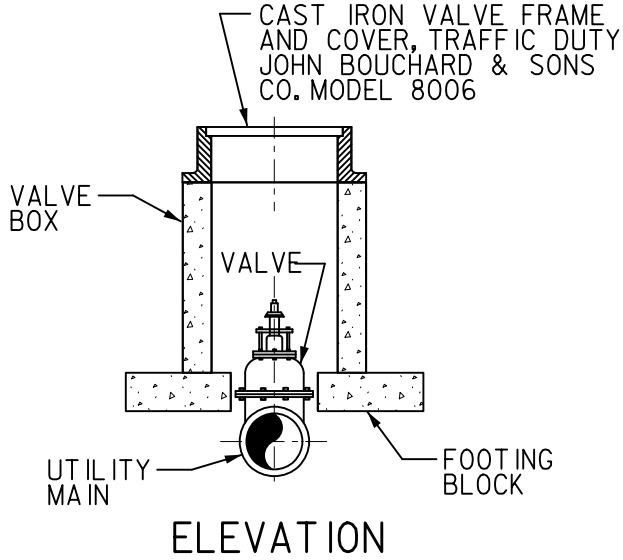

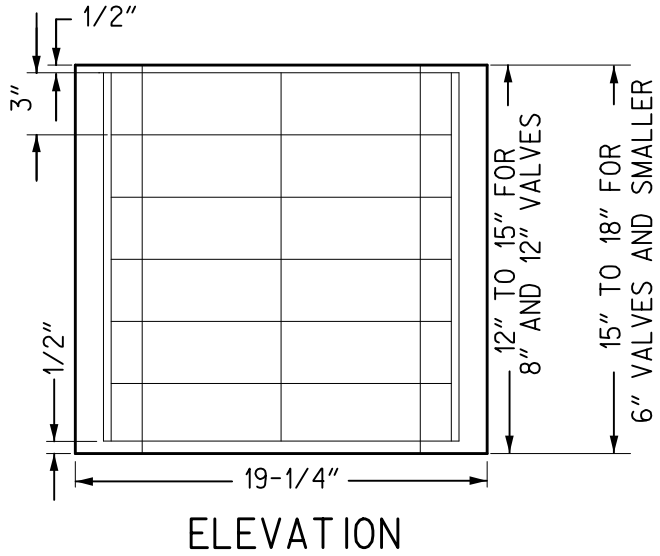

NOTES:

1. STEEL REINFORCING RODS TO BE PLACED HORIZONTALLY IN SQUARES 16"x14" AND TO BE STAGGERED APPROX. AS SHOWN ON PLAN VIEW. ONE FOR EVERY 3" OF HEIGHT OF BOX. VERTICAL RISERS ARE TO BE 1" SHORTER THAN THE HEIGHT OF THE BOX AND SHALL BE PLACED IN EACH CORNER AND AT THE HALF WAY POINT OF EACH SIDE OF THE BOX USING 8 RISERS TO THE BOX.
2. FOUR (4) CONCRETE BLOCKS ARE TO BE PLACED UNDER EACH CORNER OF THE VALVE BOX AS SHOWN. NO REINFORCING IS REQUIRED IN THE FOOTING BLOCKS. CONCRETE MIX TO BE 1 PART CEMENT, 2 PARTS SAND AND 4 PARTS NO. 2 CRUSHED STONE OR GRAVEL.
3. CONCRETE SHALL CONFORM TO ASTM C478.

(NOT TO SCALE)

HISTORIC FRANKLIN TENNESSEE

STANDARD DETAIL
WATER MANAGEMENT DEPARTMENT
CITY OF FRANKLIN, TENNESSEE

CONCRETE VALVE BOX

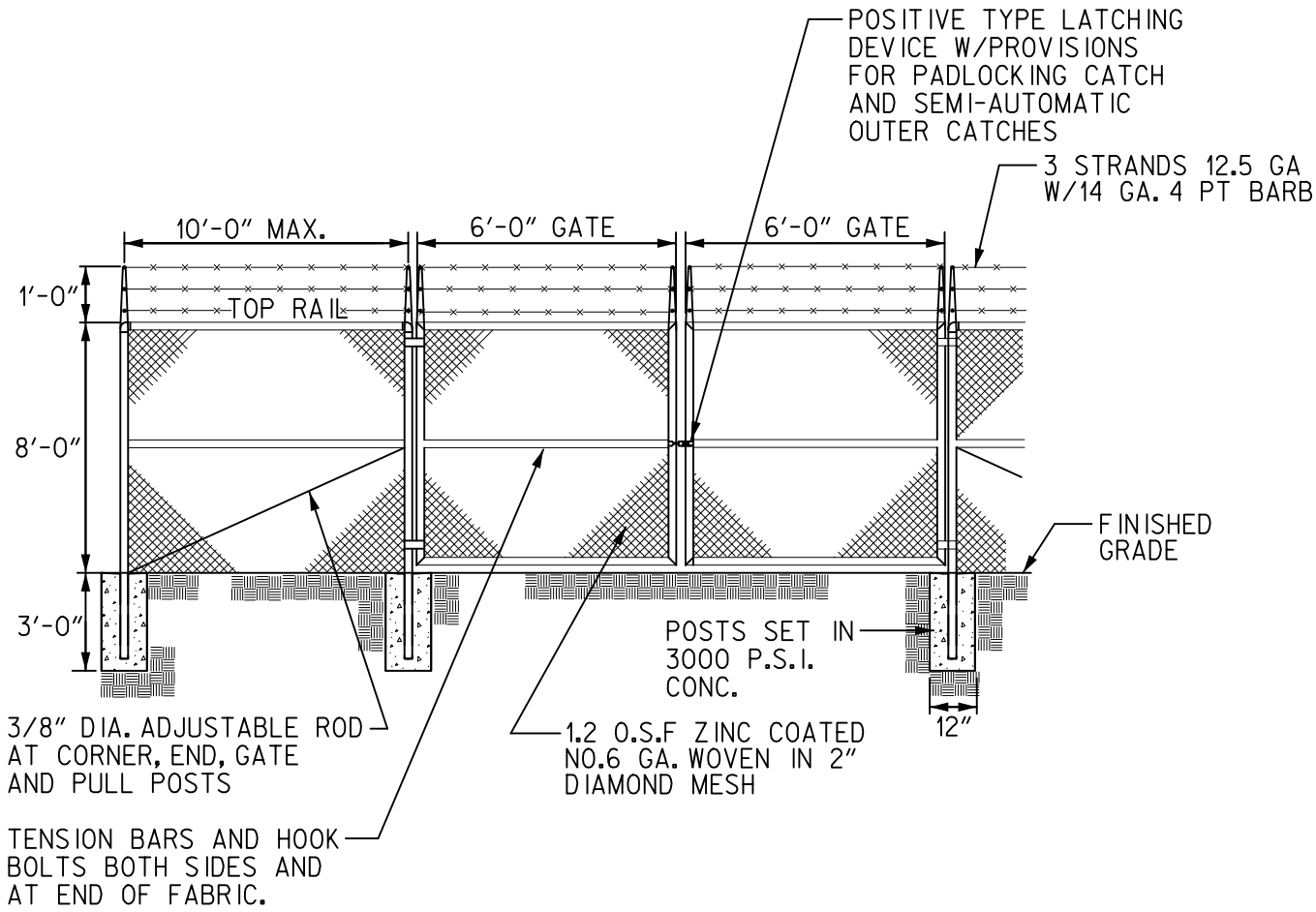

NOTE:
ALL POSTS AND OTHER APPURTENANCES SHALL BE HOT DIP GALVANIZED W/ MIN. 1.2 O.S.F. ZINC. ALL FITTINGS SHALL BE MALLEABLE OR DUCTILE IRON OR STEEL.

(NOT TO SCALE)

HISTORIC FRANKLIN TENNESSEE

STANDARD DETAIL
WATER MANAGEMENT DEPARTMENT
CITY OF FRANKLIN, TENNESSEE

CHAIN-LINK FENCE WITH DOUBLE 6' GATES

G - 2

MAIN SIZE	END PIPE SIZE
4" – 12"	2" BLOW-OFF
16" & GREATER	AS APPROVED BY ENGINEER

NOTE:

1. FOR MAINS THAT ARE TO BE EXTENDED USE A VALVE EQUAL TO THE MAIN SIZE AS THE BLOW-OFF CONTROL VALVE AND THEN REDUCE TO 2" PIPE.

2. ROD SHALL BE "HOOKED" INTO THRUST COLLAR.

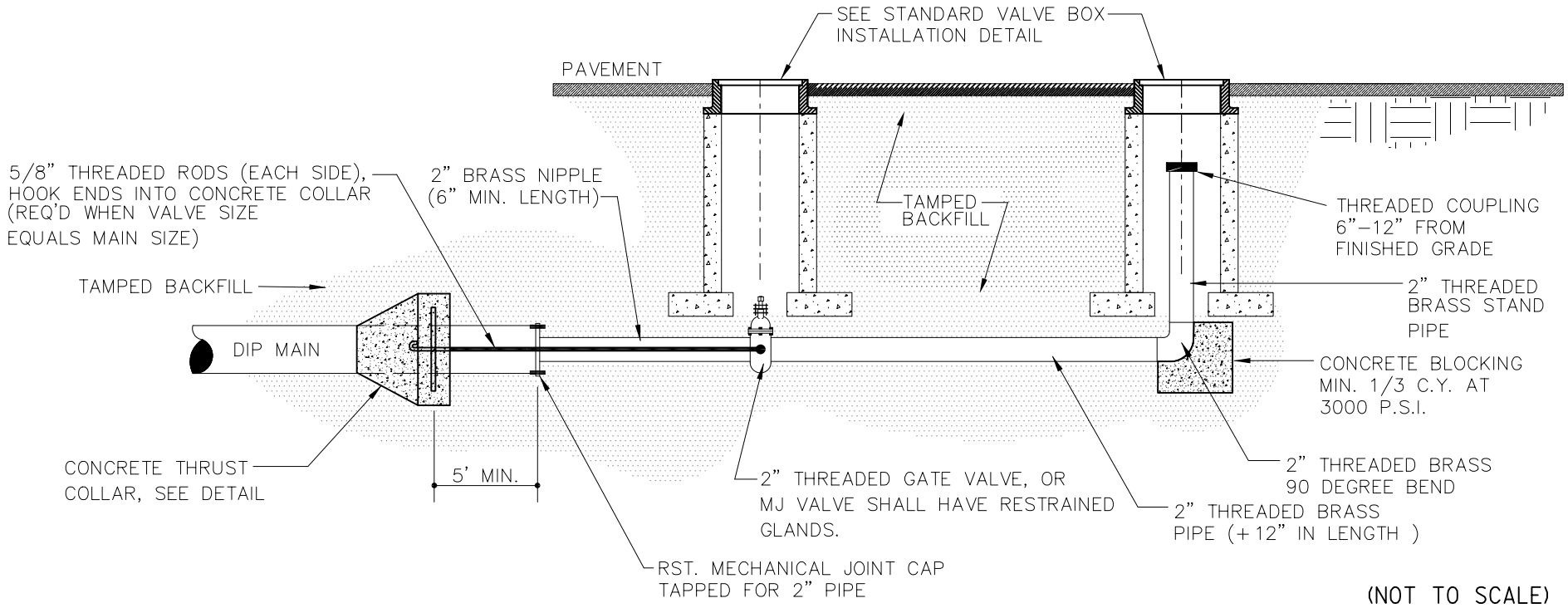

(NOT TO SCALE)

HISTORIC FRANKLIN TENNESSEE

STANDARD DETAIL
WATER MANAGEMENT DEPARTMENT
CITY OF FRANKLIN, TENNESSEE

2" BLOW-OFF ASSEMBLY FOR WATER AND RECLAIMED WATER

G - 3

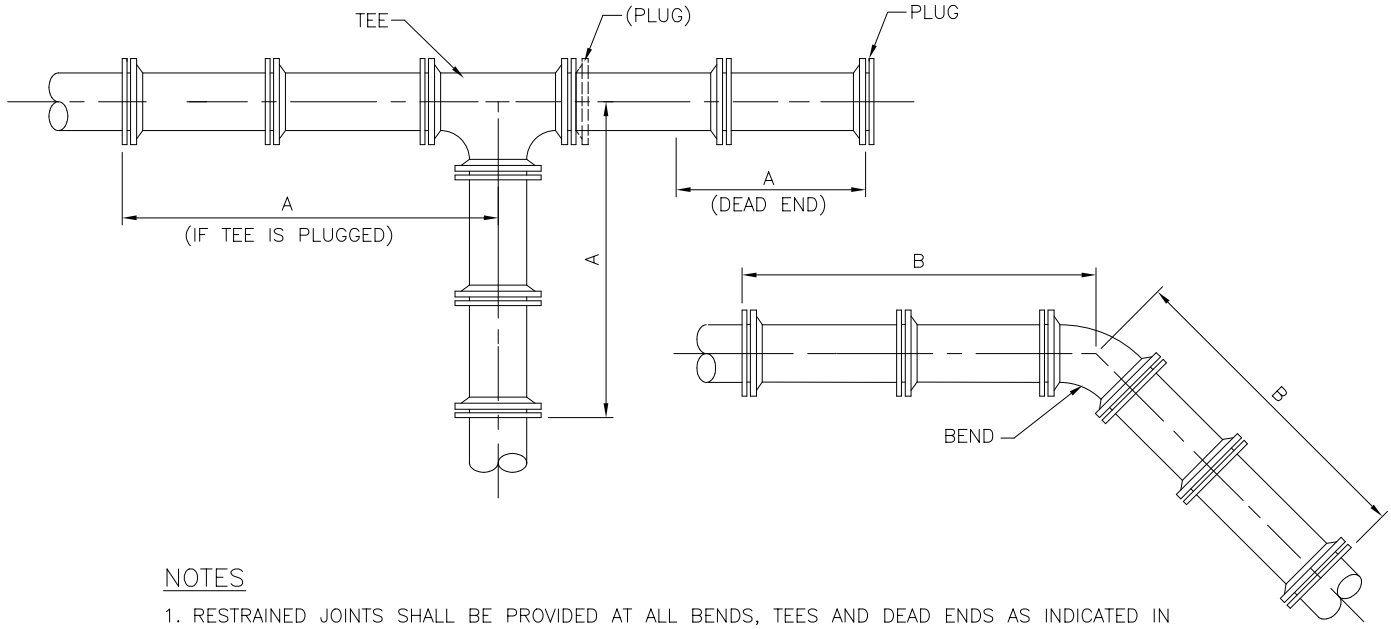

NOTES

1. RESTRAINED JOINTS SHALL BE PROVIDED AT ALL BENDS, TEES AND DEAD ENDS AS INDICATED IN THESE TABLES, OR AS SHOWN ON THE DRAWINGS FOR OTHER SPECIFIC CONDITIONS. THE USE OF CONCRETE THRUST BLOCKING IS PROHIBITED, UNLESS OTHERWISE INDICATED ON THE DRAWINGS.
2. MAXIMUM LENGTHS OF PIPE SHALL BE USED WITHIN RESTRAINED SECTIONS.
3. LENGTH OF PIPE WITH RESTRAINED JOINTS IS BASED ON INSTALLATION IN GW SOILS. IF OTHER SOIL CONDITIONS ARE ENCOUNTERED, LENGTH OF RESTRAINED PIPE SHALL BE ADJUSTED ACCORDINGLY. ENGINEER SHALL SUPPLY CALCULATIONS TO THE CITY OF FRANKLIN FOR REVIEW.

LENGTH OF PIPE TO BE RESTRAINED FOR PVC (FEET)						
	A	A	B	B	B	B
SIZE	DEAD END	TEE & PLUG	90° BEND	45° BEND	22 1/2° BEND	11 1/4° BEND
4"	32	31	15	6	3	2
6"	45	44	20	9	4	2
8"	59	57	26	11	6	3
10"	71	68	31	13	7	3
12"	83	80	36	15	8	4
14"	95	91	41	17	8	4
16"	107	102	46	19	9	5
20"	130	124	54	23	11	6
24"	151	144	63	26	13	7
>24"	SHALL BE CALCULATED INDEPENDENTLY WITH THE SPECIFIC CONDITIONS.					

TABLE APPLIES TO PVC PIPE FOR THE FOLLOWING CONDITIONS:

1. TEST PRESSURE: 150 PSI
2. SOIL TYPE: GW
3. LAYING CONDITION: TYPE 3
4. DEPTH OF COVER: 3'
5. SAFETY FACTOR: 1.5

(NOT TO SCALE)

HISTORIC FRANKLIN TENNESSEE

STANDARD DETAIL
WATER MANAGEMENT DEPARTMENT
CITY OF FRANKLIN, TENNESSEE

RESTRAINED JOINT TABLE - PVC

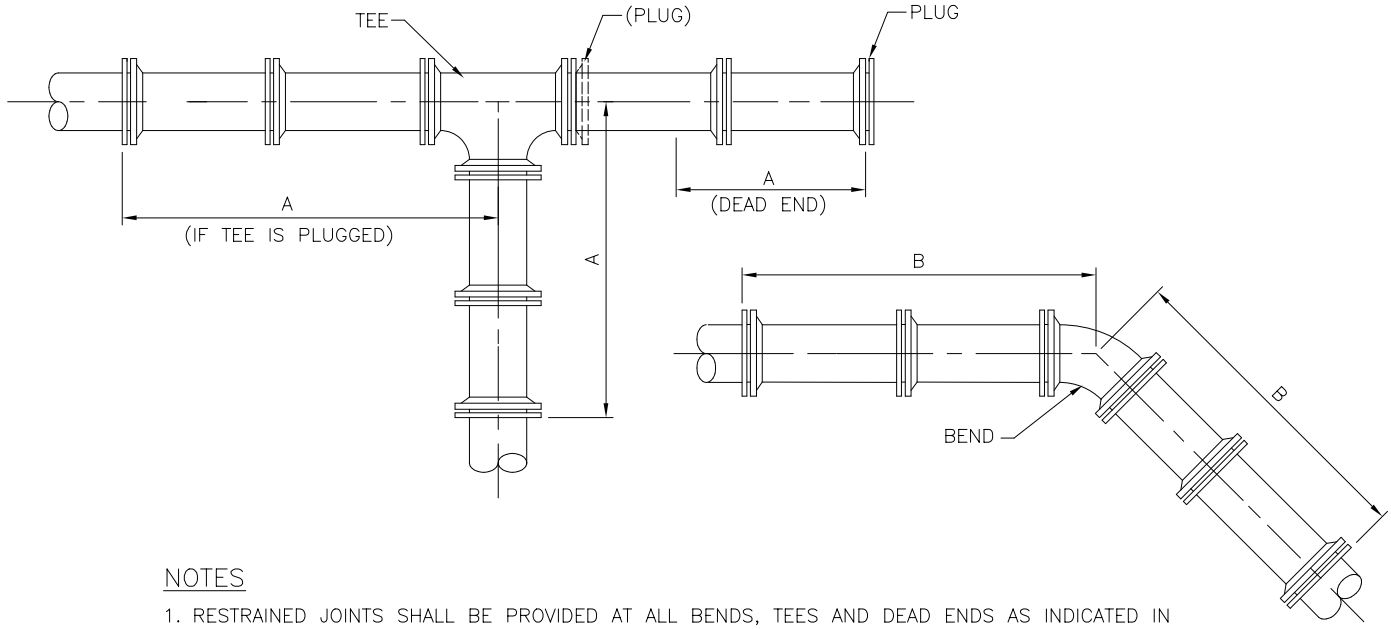

NOTES

1. RESTRAINED JOINTS SHALL BE PROVIDED AT ALL BENDS, TEES AND DEAD ENDS AS INDICATED IN THESE TABLES, OR AS SHOWN ON THE DRAWINGS FOR OTHER SPECIFIC CONDITIONS. THE USE OF CONCRETE THRUST BLOCKING IS PROHIBITED, UNLESS OTHERWISE INDICATED ON THE DRAWINGS.
2. MAXIMUM LENGTHS OF PIPE SHALL BE USED WITHIN RESTRAINED SECTIONS.
3. LENGTH OF PIPE WITH RESTRAINED JOINTS IS BASED ON INSTALLATION IN GW SOILS. IF OTHER SOIL CONDITIONS ARE ENCOUNTERED, LENGTH OF RESTRAINED PIPE SHALL BE ADJUSTED ACCORDINGLY. ENGINEER SHALL SUPPLY CALCULATIONS TO THE CITY OF FRANKLIN FOR REVIEW.

LENGTH OF PIPE TO BE RESTRAINED FOR DIP (FEET)						
	A	A	B	B	B	B
SIZE	DEAD END	TEE & PLUG	90° BEND	45° BEND	22 1/2° BEND	11 1/4° BEND
4"	27	27	15	7	3	2
6"	38	38	21	9	5	3
8"	49	49	27	12	6	3
10"	59	59	33	14	7	4
12"	69	69	38	16	8	4
14"	79	79	43	18	9	5
16"	89	89	48	20	10	5
20"	107	107	58	24	12	6
24"	125	125	67	28	14	7
>24"	SHALL BE CALCULATED INDEPENDENTLY WITH THE SPECIFIC CONDITIONS					

TABLE APPLIES TO DUCTILE IRON PIPE FOR THE FOLLOWING CONDITIONS:

1. TEST PRESSURE: 200 PSI
2. SOIL TYPE: GW
3. LAYING CONDITION: TYPE 2
4. DEPTH OF COVER: 3'
5. SAFETY FACTOR: 1.5

(NOT TO SCALE)

HISTORIC FRANKLIN TENNESSEE

STANDARD DETAIL
WATER MANAGEMENT DEPARTMENT
CITY OF FRANKLIN, TENNESSEE

RESTRAINED JOINT TABLE - DIP

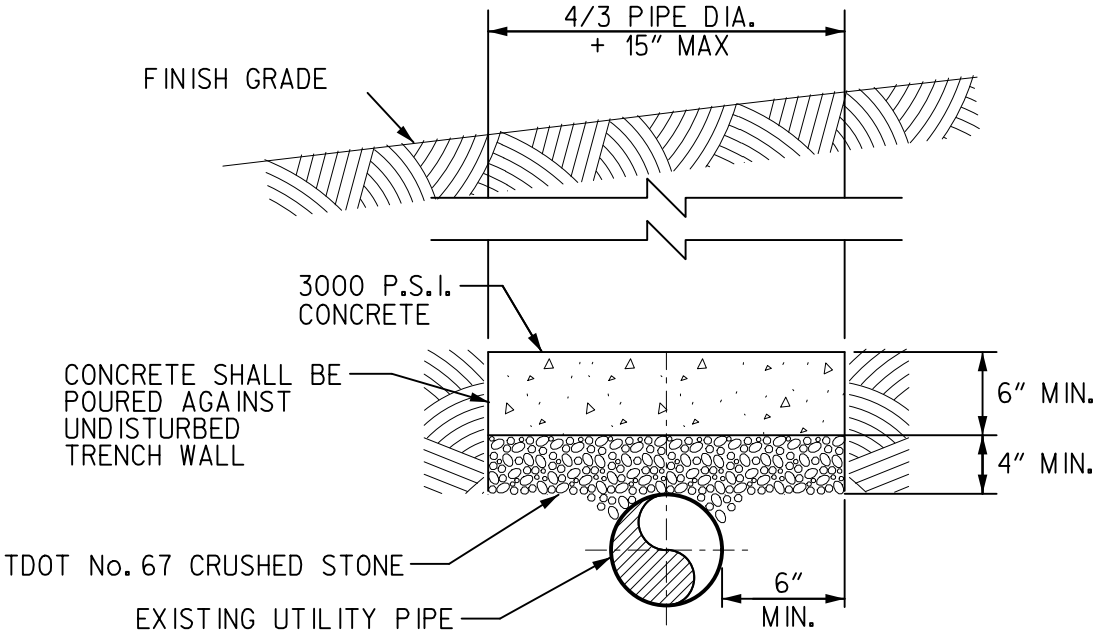

CONCRETE PROTECTION
FOR EXISTING UTILITY LINES

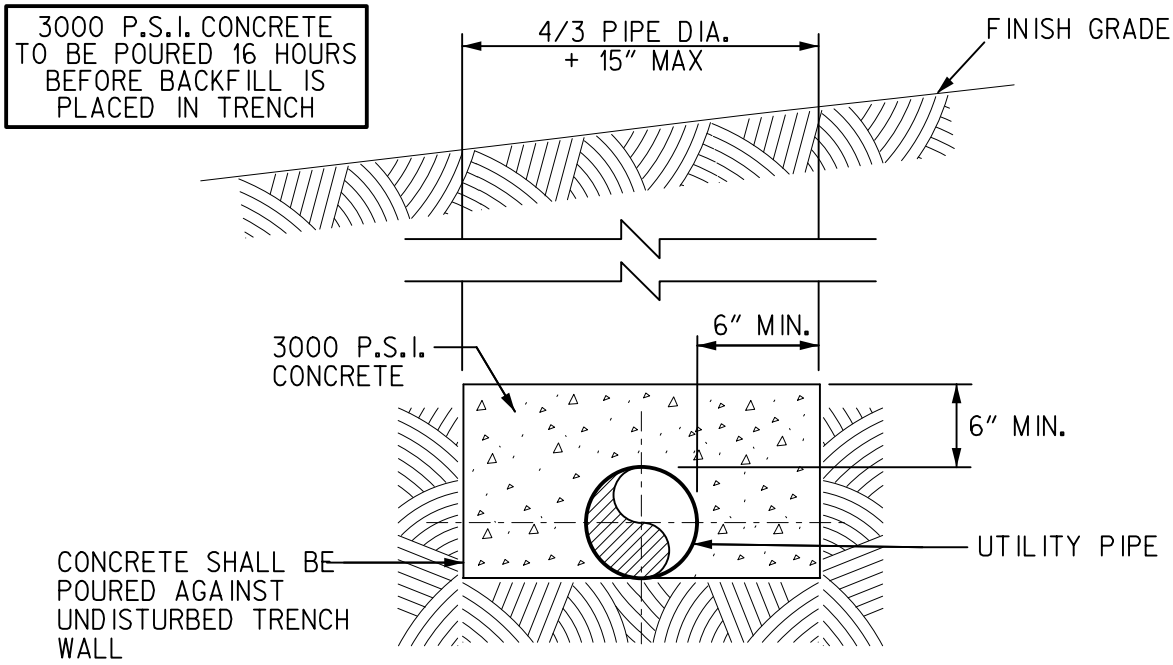

CONCRETE ENCASEMENT
FOR NEW UTILITY LINES

(NOT TO SCALE)

HISTORIC
FRANKLIN
TENNESSEE

STANDARD DETAIL
WATER MANAGEMENT DEPARTMENT
CITY OF FRANKLIN, TENNESSEE

CONCRETE PROTECTION FOR BURIED UTILITIES

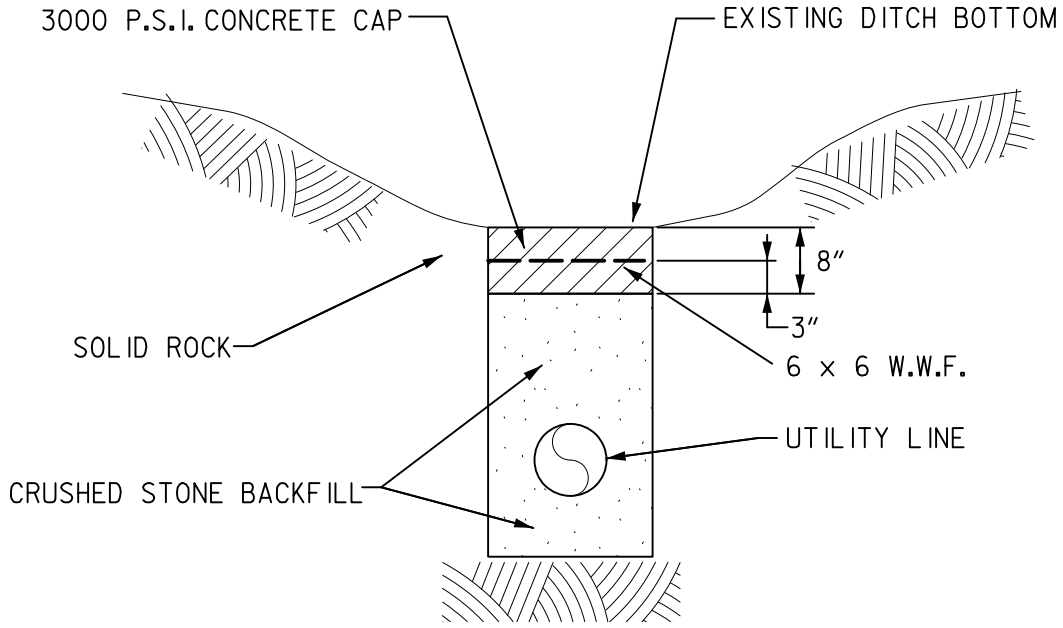

ROCK EXCAVATION

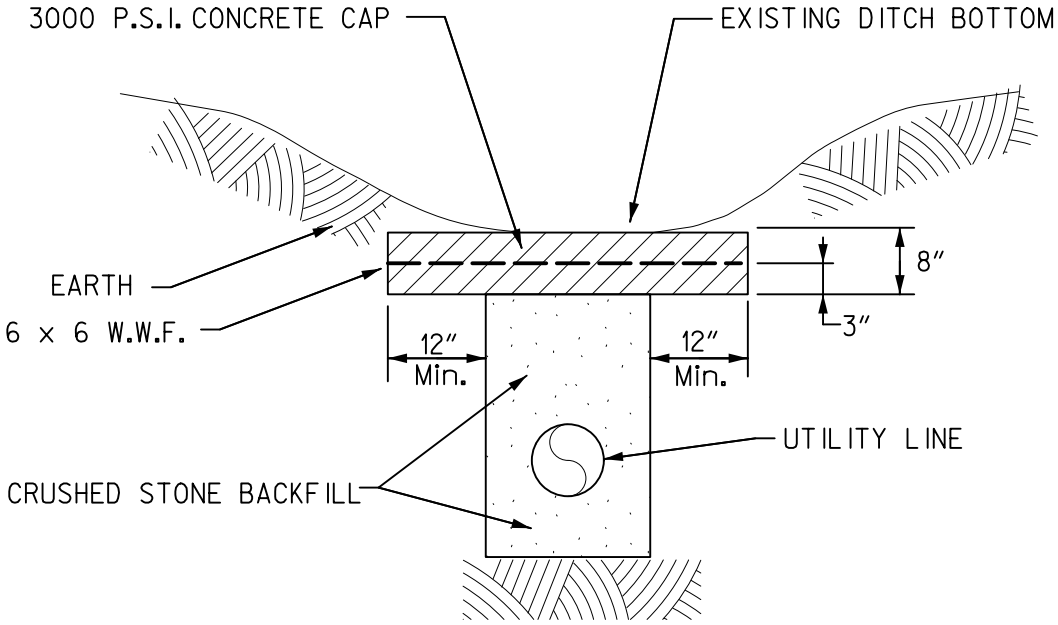

EARTH EXCAVATION

(NOT TO SCALE)

HISTORIC FRANKLIN TENNESSEE

STANDARD DETAIL
WATER MANAGEMENT DEPARTMENT
CITY OF FRANKLIN, TENNESSEE

CONCRETE CAP FOR UTILITY LINES

G - 7

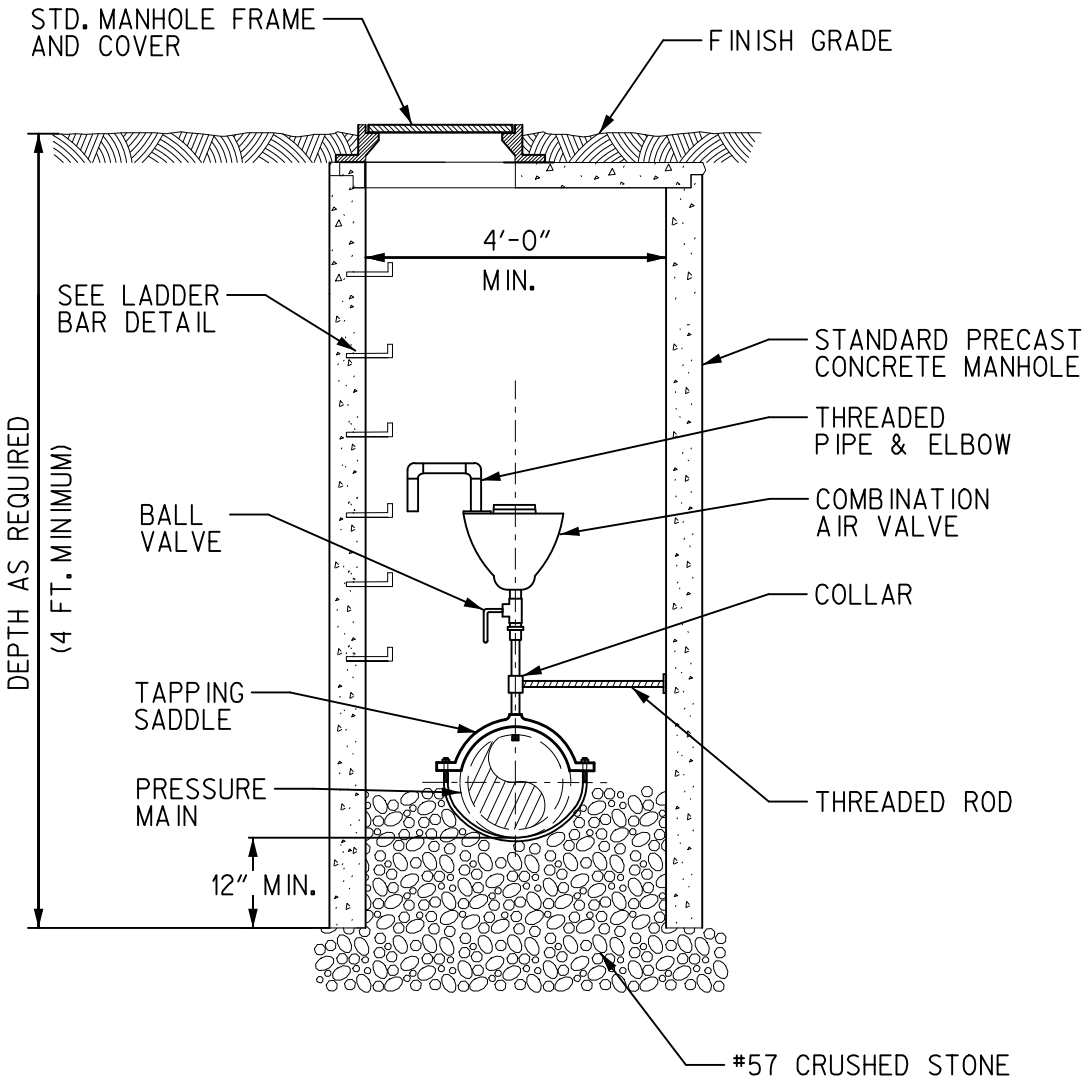

NOTES:

1. VALVE IS TO BE SIZED FOR CONDITIONS.
2. VALVE SHALL BE APCO 140C OR VAL-MATIC 201C-202C FOR WATER AND RECLAIMED MAINS.
3. VALVE SHALL BE APCO 440 OR VAL-MATIC 801A FOR SEWAGE FORCE MAINS.

(NOT TO SCALE)

HISTORIC FRANKLIN TENNESSEE

STANDARD DETAIL
WATER MANAGEMENT DEPARTMENT
CITY OF FRANKLIN, TENNESSEE

COMBINATION AIR VALVE ASSEMBLY FOR PRESSURE MAINS

NOTE:
36" MIN. COVER FOR ALL UTILITIES UNLESS OTHERWISE IDENTIFIED ON THE DRAWINGS

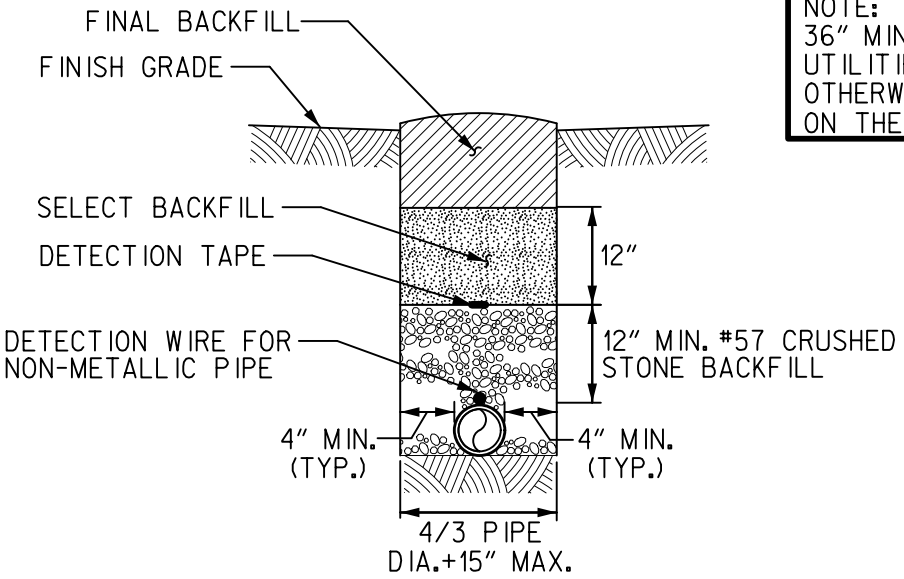

ALL PIPE IN EARTH

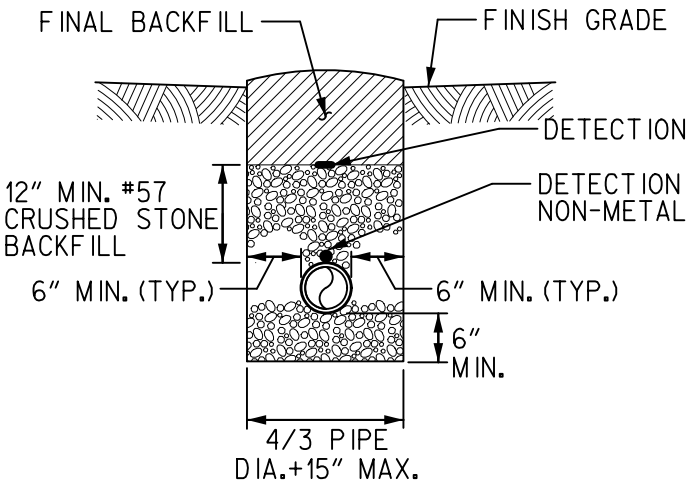

ALL PIPE IN ROCK

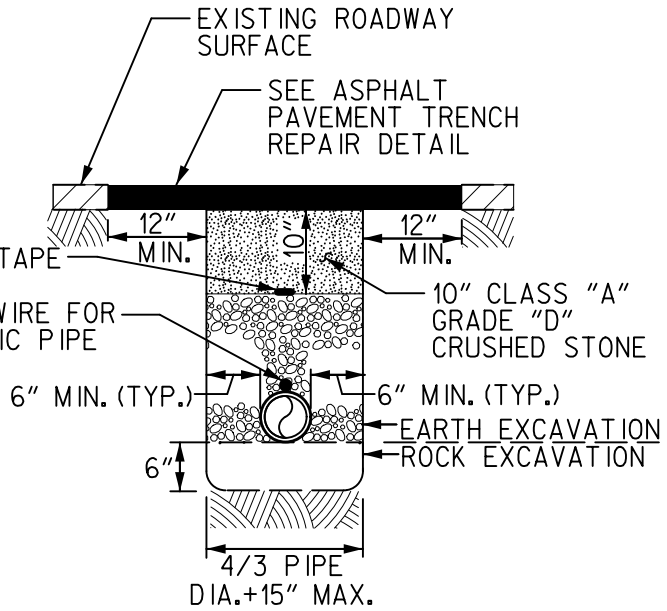

ALL PIPE IN TRAFFIC AREAS

NOTE:
FLOWABLE FILL REQUIRED FOR ALL WORK IN STATE RIGHT OF WAY.
FILL FOR OTHER STREETS AS SPECIFIED BY CITY OF FRANKLIN.

(NOT TO SCALE)

HISTORIC FRANKLIN TENNESSEE

STANDARD DETAIL
WATER MANAGEMENT DEPARTMENT
CITY OF FRANKLIN, TENNESSEE

BEDDING AND BACKFILLING FOR PRESSURE LINES

NOTE:
36" MIN. COVER FOR ALL UTILITIES UNLESS OTHERWISE IDENTIFIED ON THE DRAWINGS

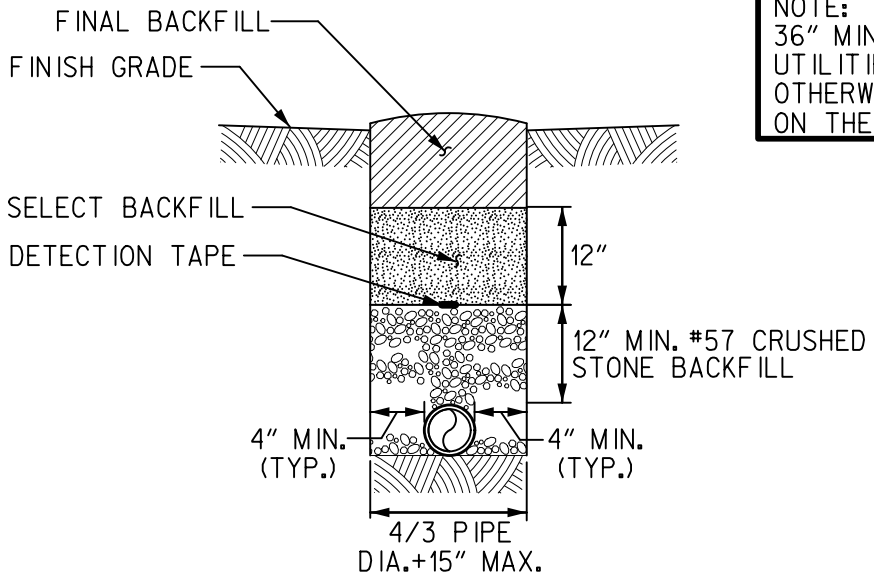

ALL PIPE IN EARTH

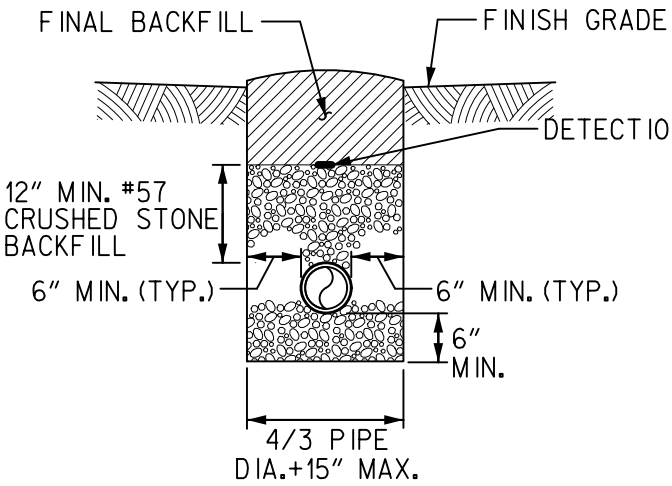

ALL PIPE IN ROCK

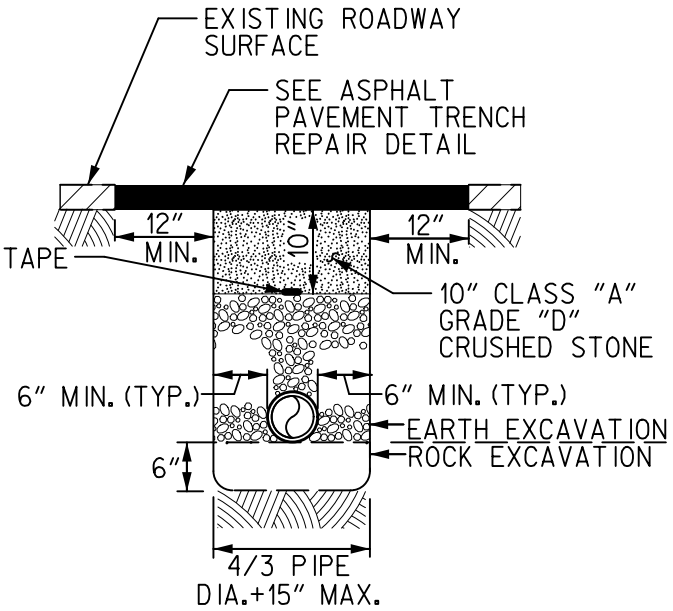

ALL PIPE IN TRAFFIC AREAS

NOTE:
FLOWABLE FILL REQUIRED FOR ALL WORK IN STATE RIGHT OF WAY.
FILL FOR OTHER STREETS AS SPECIFIED BY CITY OF FRANKLIN.

(NOT TO SCALE)

HISTORIC FRANKLIN TENNESSEE

STANDARD DETAIL
WATER MANAGEMENT DEPARTMENT
CITY OF FRANKLIN, TENNESSEE

BEDDING AND BACKFILLING FOR GRAVITY LINES

G - 10

NOTE:

WHERE MASTIC DOES NOT PROTRUDE, EITHER INSIDE OR OUTSIDE, INJECT JOINT WITH CONSEAL CS-231, CONTROLED EXPANSION WATERSTOP, OR APPROVED EQUIVALENT.

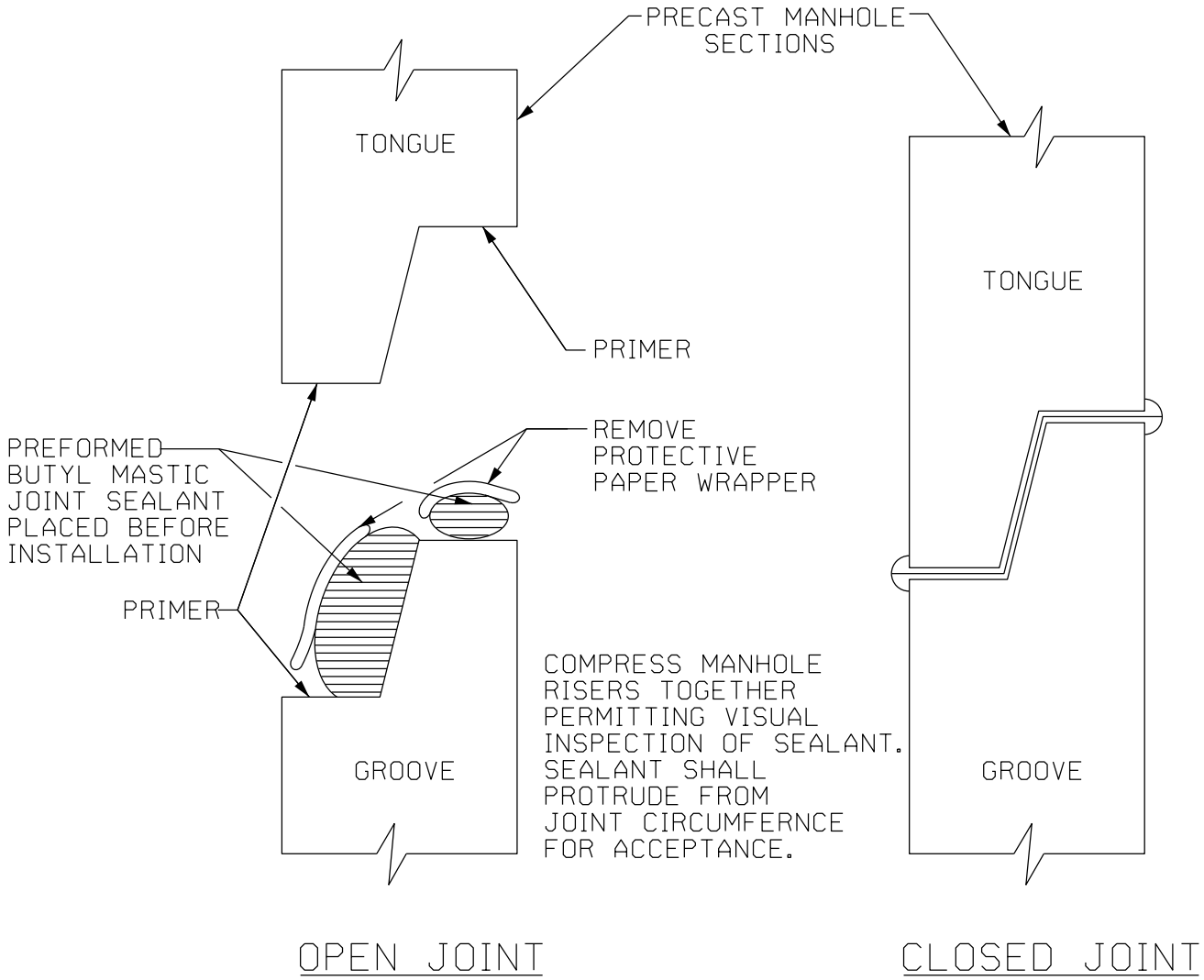

(NOT TO SCALE)

HISTORIC FRANKLIN TENNESSEE

STANDARD DETAIL
WATER MANAGEMENT DEPARTMENT
CITY OF FRANKLIN, TENNESSEE

BUTYL MASTIC GASKET FOR PRECAST MANHOLE SECTIONS

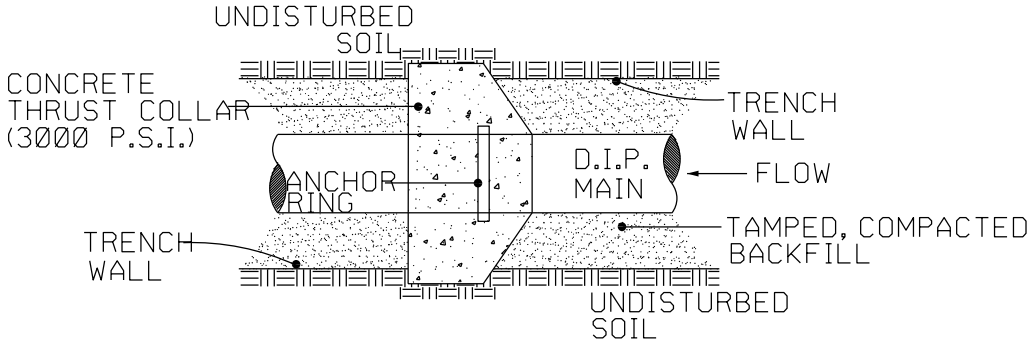

PLAN VIEW

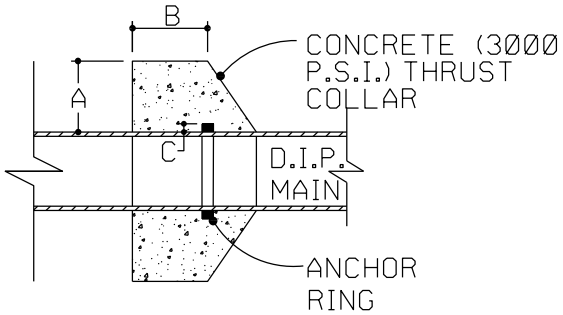

SECTION VIEW

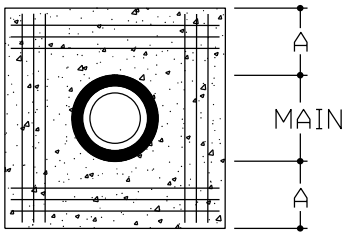

REINFORCING

SCHEDULE				
PIPE DIAMETER	CONCRETE THRUST COLLAR		ANCHOR RING	RINGS REQUIRED
	A	B	C	
6",8",12"	1'-0"	1'-0"	2"	ONE
16"	1'-4"	1'-0"	2"	ONE
20 "	1'-4"	1'-0"	3"	ONE
24"	1'-4"	1'-0"	3"	TWO
30"	1'-4"	1'-2"	4"	TWO
36"	1'-4"	1'-4"	4"	TWO

NOTES:

1. 6" TO 16" MAINS = 12-NO. 7 BARS,
   20" TO 36" MAINS = 12-NO. 8 BARS,
   BARS PLACED AS SHOWN.

2. ANCHOR RING SHALL BE A MJ RESTRAINED JOINT GLAND BY EBAA IRON OR APPROVED EQUIVALENT.

(NOT TO SCALE)

HISTORIC FRANKLIN TENNESSEE

STANDARD DETAIL
WATER MANAGEMENT DEPARTMENT
CITY OF FRANKLIN, TENNESSEE

THRUST COLLAR INSTALLATION

G - 12

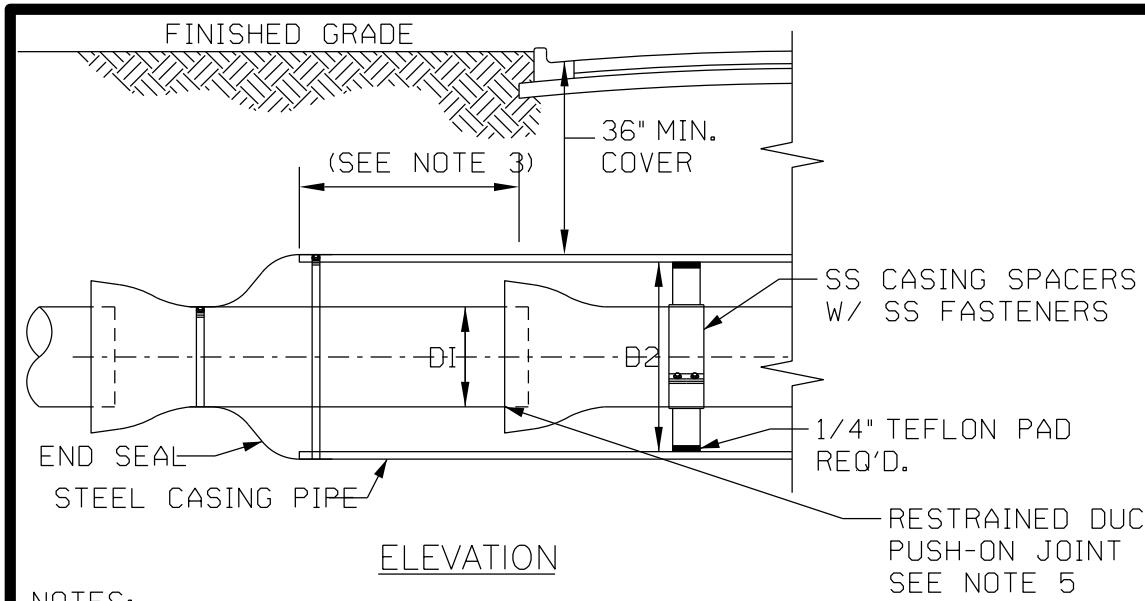

ELEVATION

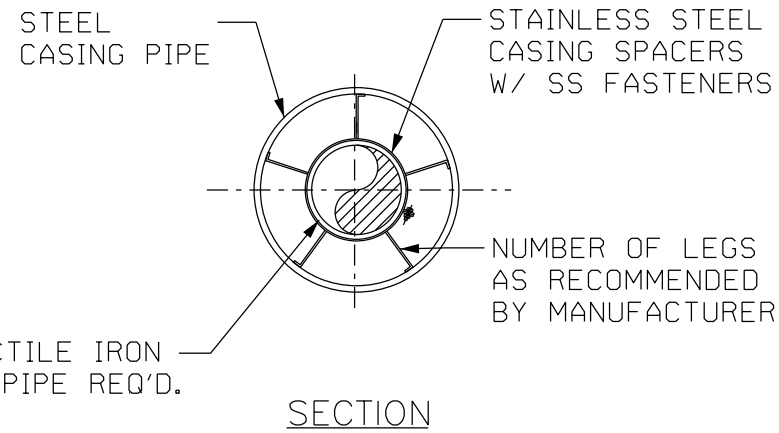

SECTION

NOTES:

1. WHEN CONSTRUCTION IS WITHIN TDOT OR RAILROAD JURISDICTION, ADDITIONAL REQUIREMENTS OF EACH AGENCY SHALL BE MET.
2. STAINLESS STEEL CASING SPACERS ARE REQUIRED AS SHOWN.
3. WHERE PRACTICAL, CASING SHALL EXTEND A MIN. OF 8' BEYOND EDGE OF PAVEMENT OR EVEN WITH R.O.W. OR EASEMENT.
4. A MINIMUM OF 3 CASING SPACERS PER 20 LINEAR FEET OF INSTALLED CARRIER PIPE SHALL BE PROVIDED.
5. CARRIER PIPE SHALL BE RESTRAINED JOINT.

CARRIER PIPE AND CASING PIPE SIZES (MIN.)										
CARRIER PIPE NOM. DIA. (DI)	2	4	6	8	10	12	14	16	20	24
CASING PIPE NOM. DIA. (D2)	6	14	16	18	22	24	30	30	36	48
WALL THICKNESS (IN.) R.O.W.	0.250	0.250	0.250	0.250	0.250	0.250	0.312	0.312	0.375	0.500
WALL THICKNESS (IN.) RAILROAD	0.250	0.250	0.250	0.312	0.375	0.375	0.500	0.500	0.563	0.625

(NOT TO SCALE)

HISTORIC FRANKLIN TENNESSEE

STANDARD DETAIL
WATER MANAGEMENT DEPARTMENT
CITY OF FRANKLIN, TENNESSEE

BORE AND JACK CASING

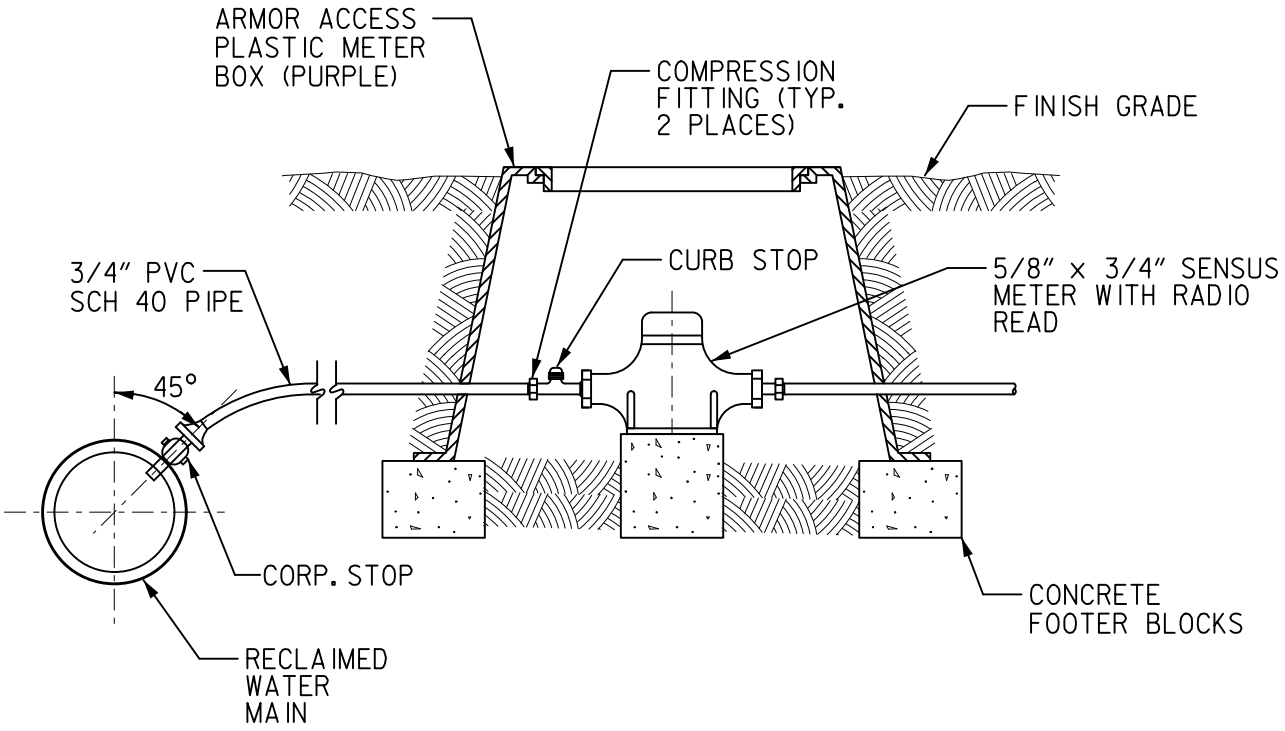

(NOT TO SCALE)

HISTORIC FRANKLIN TENNESSEE

STANDARD DETAIL
WATER MANAGEMENT DEPARTMENT
CITY OF FRANKLIN, TENNESSEE

3/4" RECLAIMED WATER SERVICE ASSEMBLY

RW - 1

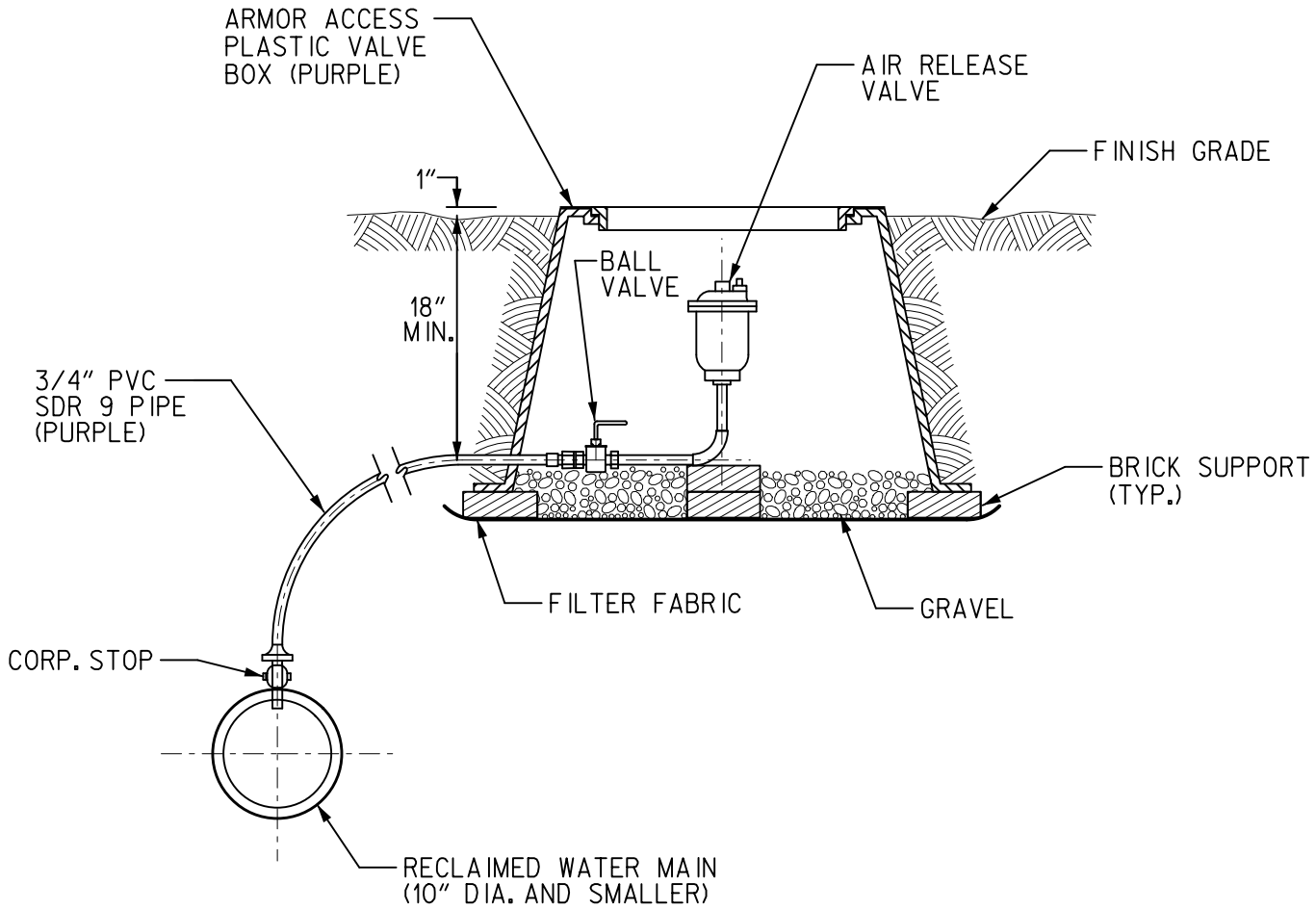

NOTES:

1. VALVE IS TO BE SIZED FOR CONDITIONS.
2. AIR RELEASE VALVES TO BE APCO 200A OR CRISPIN A.R. SERIES.
3. IF ASSEMBLY IS TO BE INSTALLED IN TRAFFIC AREA, BOX AND COVER TO BE TRAFFIC BEARING AS APPROVED BY CITY OF FRANKLIN.

(NOT TO SCALE)

HISTORIC FRANKLIN TENNESSEE

STANDARD DETAIL
WATER MANAGEMENT DEPARTMENT
CITY OF FRANKLIN, TENNESSEE

AIR RELEASE ASSEMBLY FOR RECLAIMED WATER MAINS

RW - 2

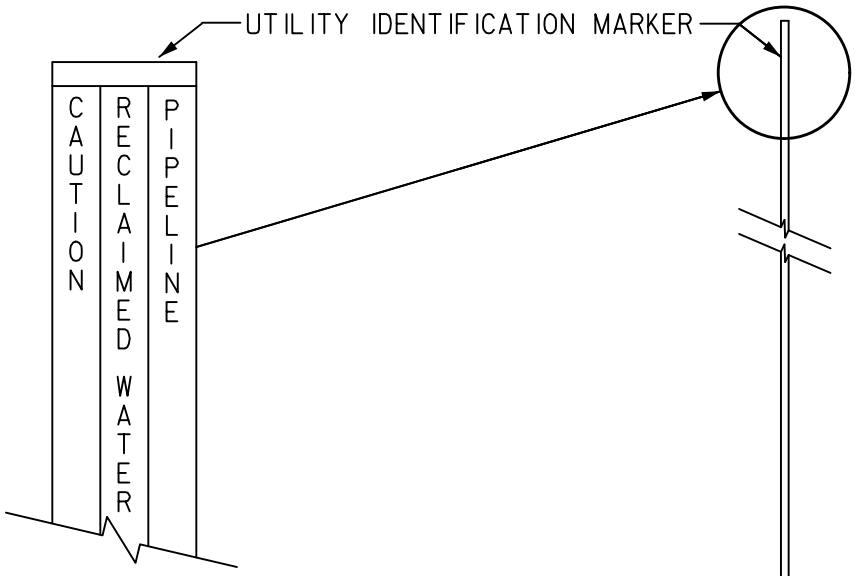

NOTES:

1. MARKER SHALL BE INSTALLED DIRECTLY BEHIND VALVE BOX COLLAR WITH LABEL FACING ROADWAY.
2. MARKERS TO BE INSTALLED AS INDICATED ON PLANS OR WHERE DIRECTED BY OWNER.
3. MARKER SHALL BE CONSTRUCTED OF DURABLE, UV RESISTANT, COMPOSITE MATERIAL.
4. VALVES SHALL OPEN TO THE RIGHT.

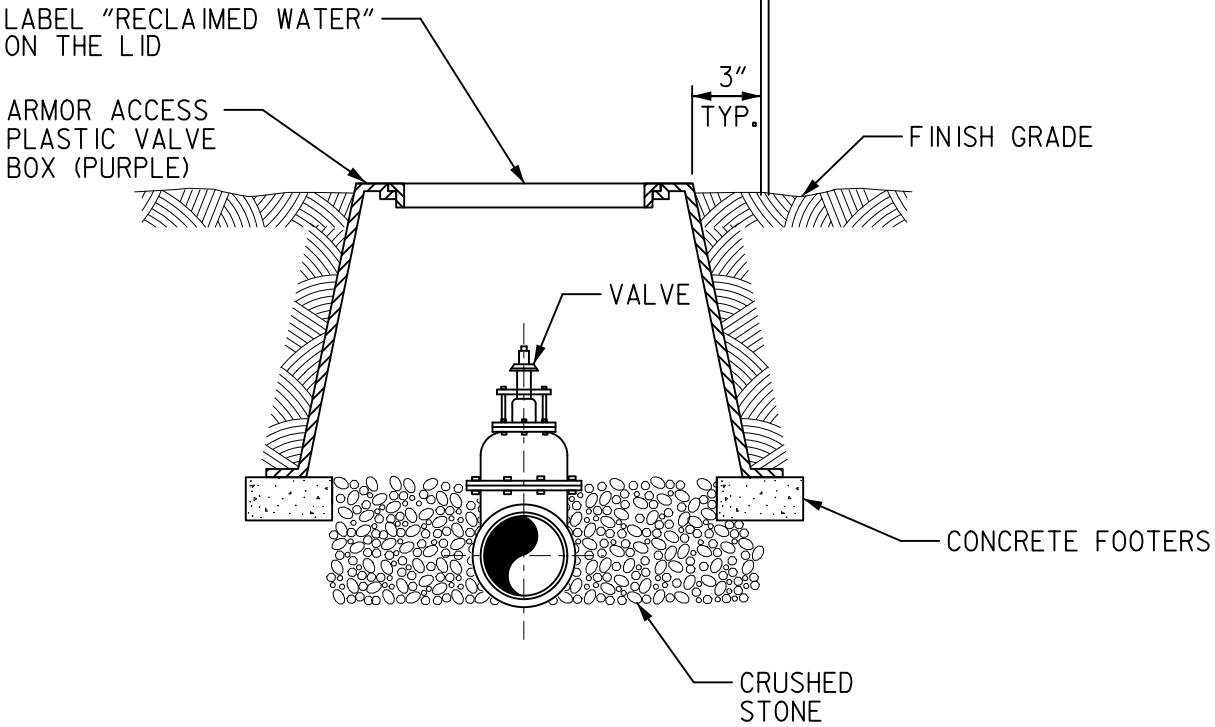

(NOT TO SCALE)

HISTORIC FRANKLIN TENNESSEE

STANDARD DETAIL
WATER MANAGEMENT DEPARTMENT
CITY OF FRANKLIN, TENNESSEE

RECLAIMED WATER VALVE BOX SETTING

RW - 3

NOTES:

1. MARKER SHALL BE INSTALLED DIRECTLY BEHIND VALVE BOX COLLAR WITH LABEL FACING ROADWAY.
2. MARKERS TO BE INSTALLED AS INDICATED ON PLANS OR WHERE DIRECTED BY OWNER.
3. MARKER SHALL BE CONSTRUCTED OF DURABLE, UV RESISTANT, COMPOSITE MATERIAL.

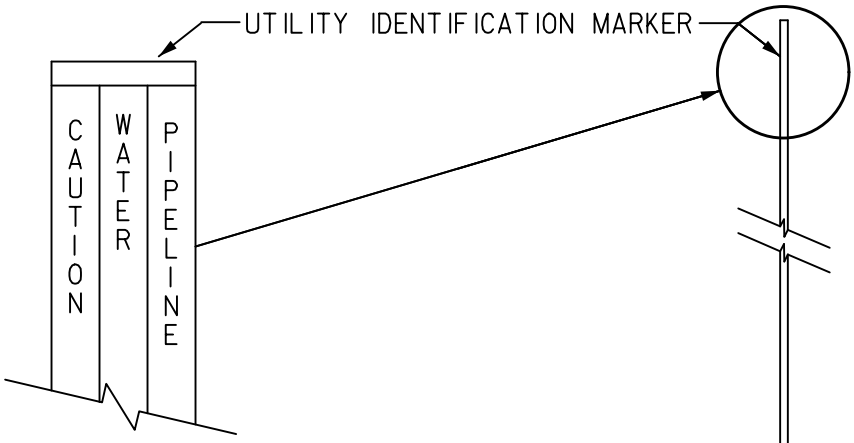

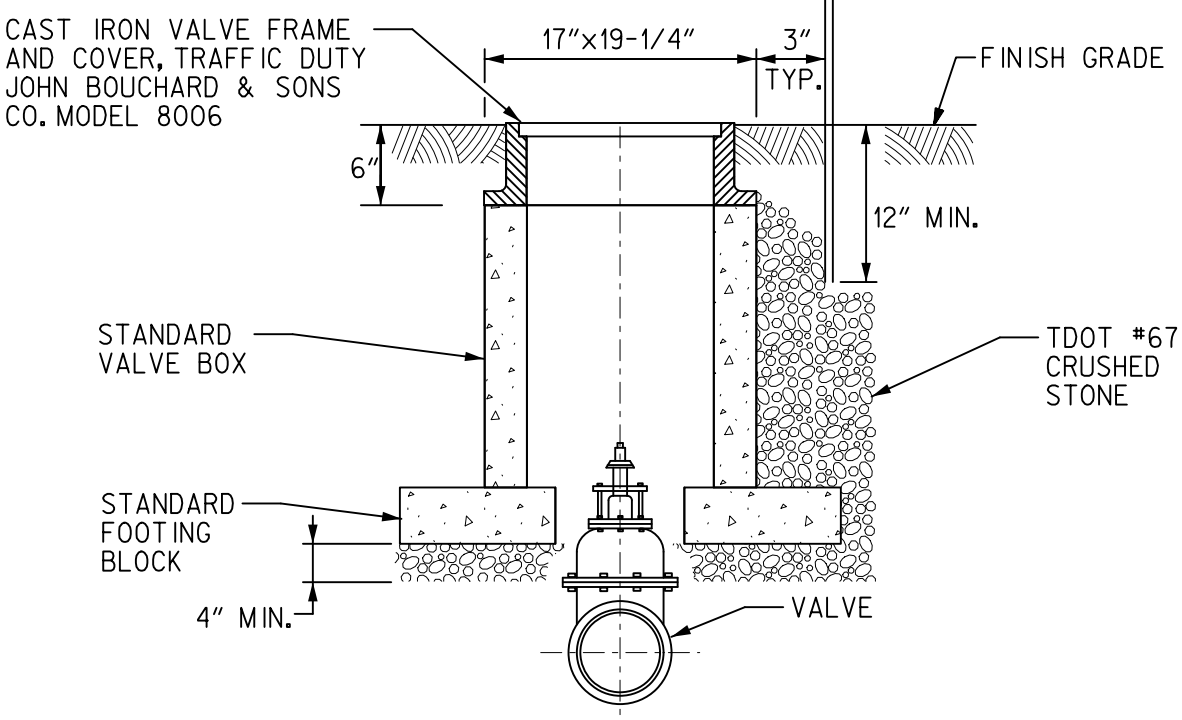

(NOT TO SCALE)

HISTORIC FRANKLIN TENNESSEE

STANDARD DETAIL
WATER MANAGEMENT DEPARTMENT
CITY OF FRANKLIN, TENNESSEE

VALVE BOX SETTING

W - 1

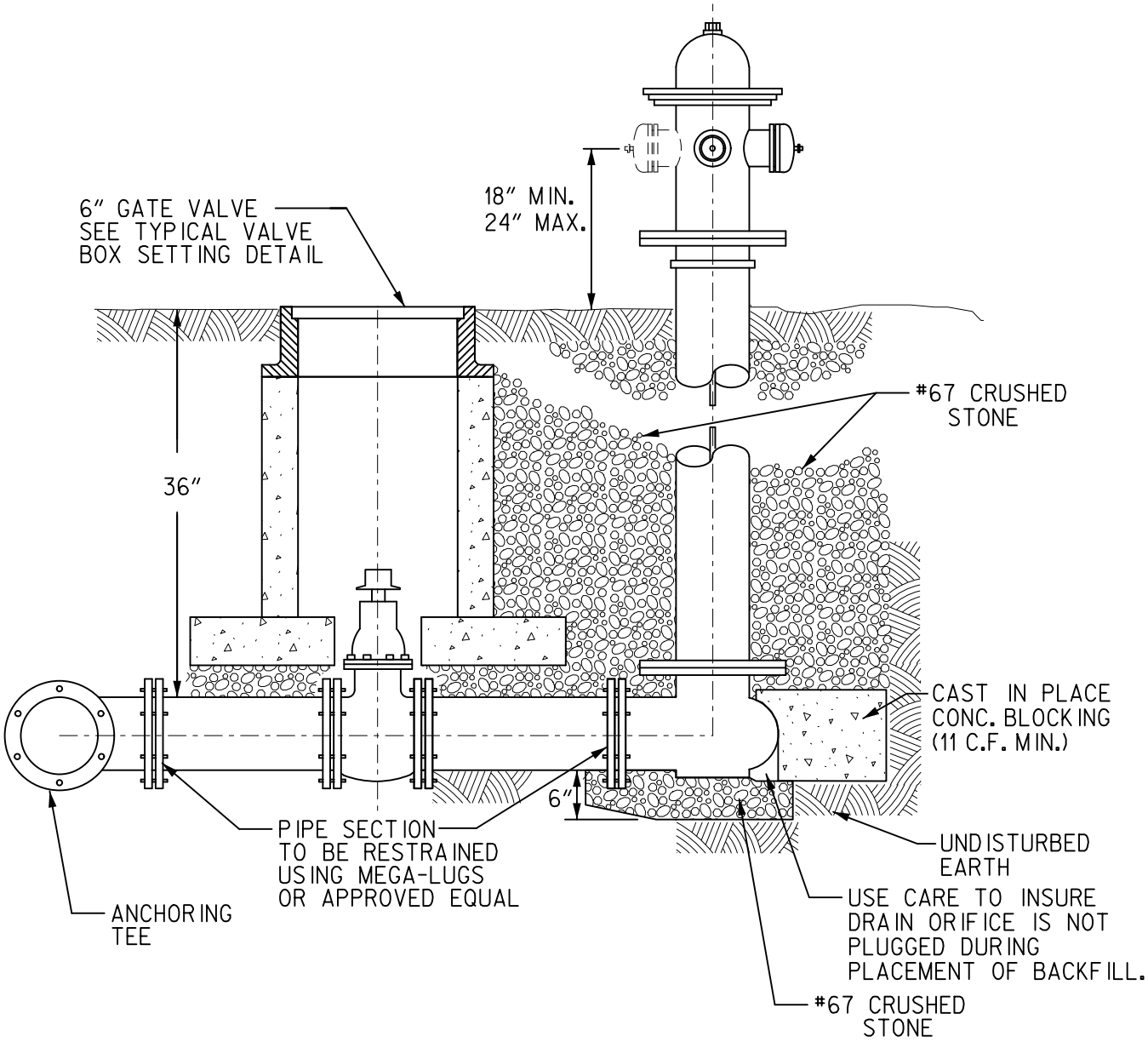

(NOT TO SCALE)

HISTORIC
FRANKLIN
TENNESSEE

STANDARD DETAIL
WATER MANAGEMENT DEPARTMENT
CITY OF FRANKLIN, TENNESSEE

FIRE HYDRANT SETTING

W - 2

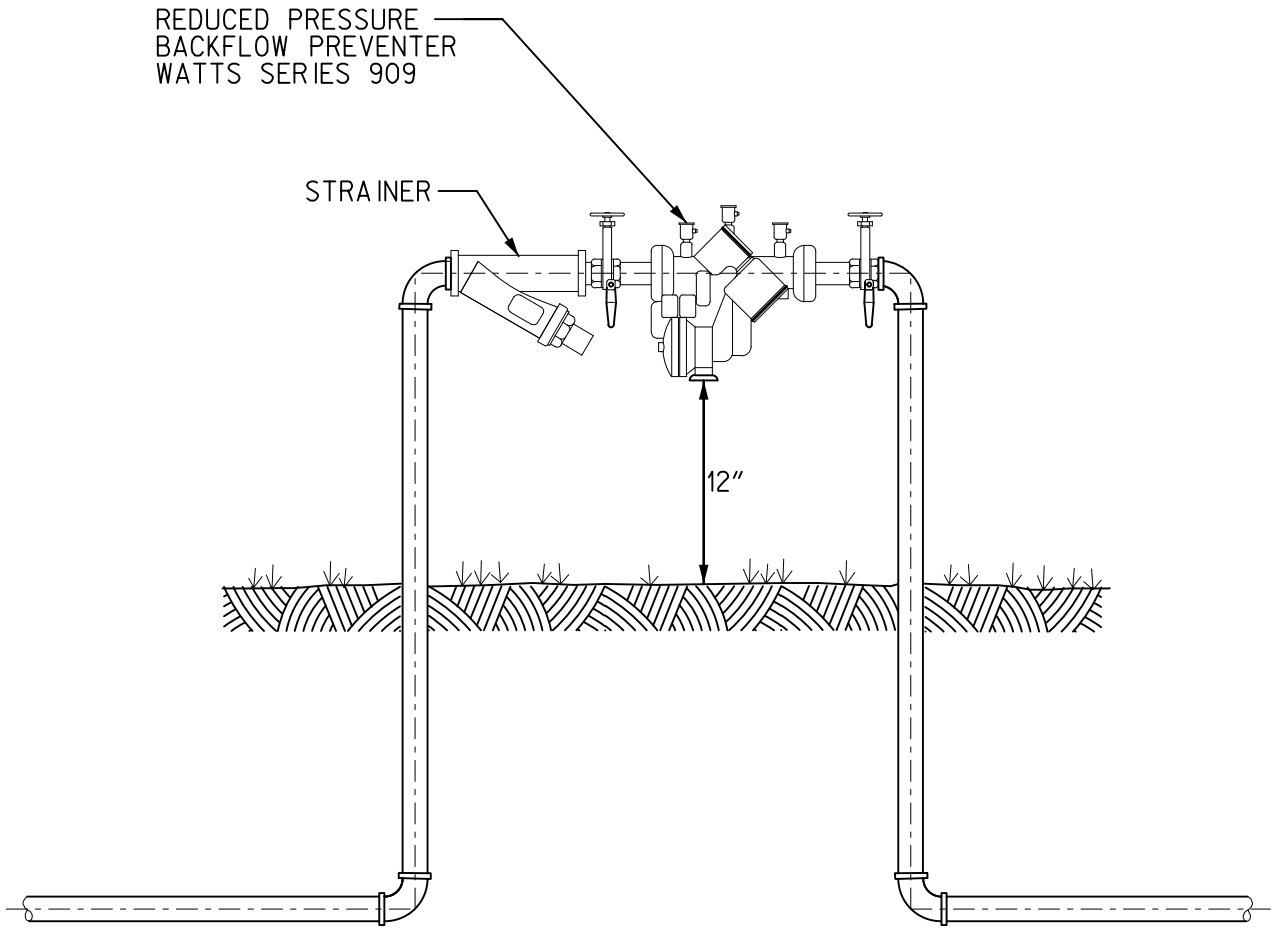

SECTION

NOTES

1. MAINTAIN 5' CLEARANCE FROM TREES, WALLS, DRIVEWAYS, POLES, ETC.
2. BACKFLOW ASSEMBLY SHOULD BE DRAINED DURING FREEZING WEATHER OR ENCLOSED IN INSULATED ENCLOSURE.

(NOT TO SCALE)

HISTORIC FRANKLIN TENNESSEE

STANDARD DETAIL
WATER MANAGEMENT DEPARTMENT
CITY OF FRANKLIN, TENNESSEE

REDUCED PRESSURE BACKFLOW PREVENTER FOR 3/4" AND 1" IRRIGATION LINES

W - 3

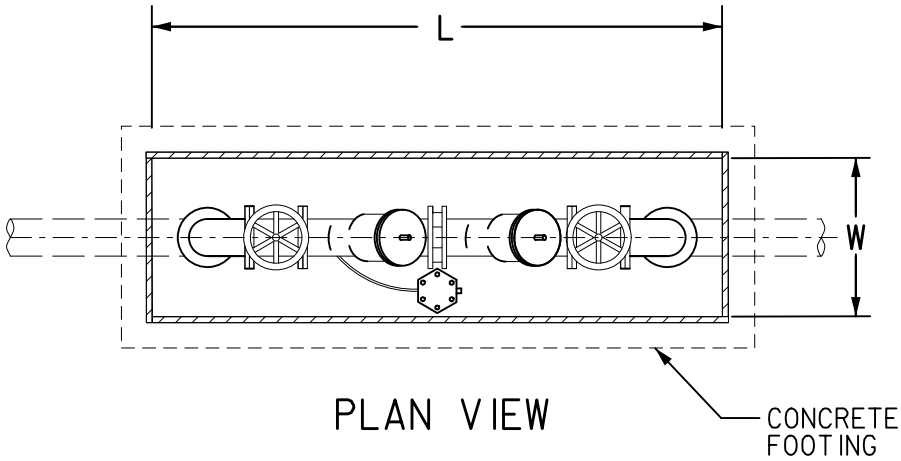

PLAN VIEW

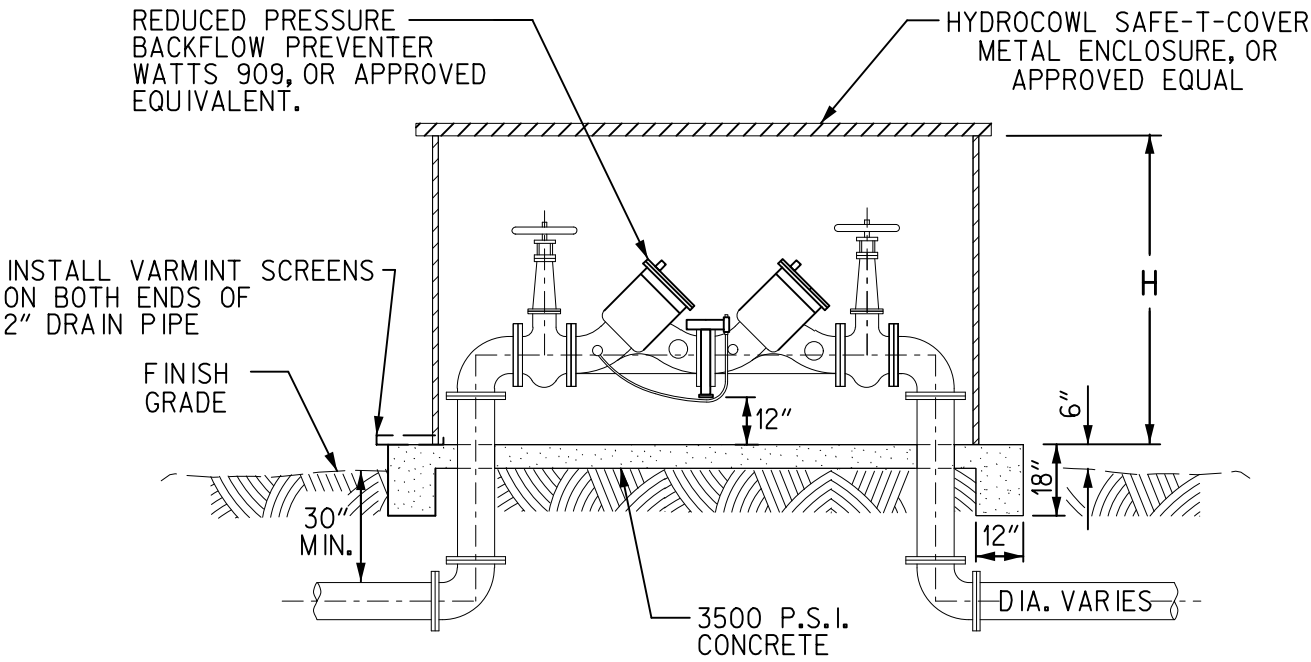

ELEVATION

Dia. (in)	L (in)	W (in)	H (in)
4	86	26	44
6	100	36	56
8	120	38	56

(NOT TO SCALE)

HISTORIC FRANKLIN TENNESSEE

STANDARD DETAIL
WATER MANAGEMENT DEPARTMENT
CITY OF FRANKLIN, TENNESSEE

REDUCED PRESSURE BACKFLOW PREVENTER FOR 4" TO 8" LINES (ABOVE GROUND)

W - 4

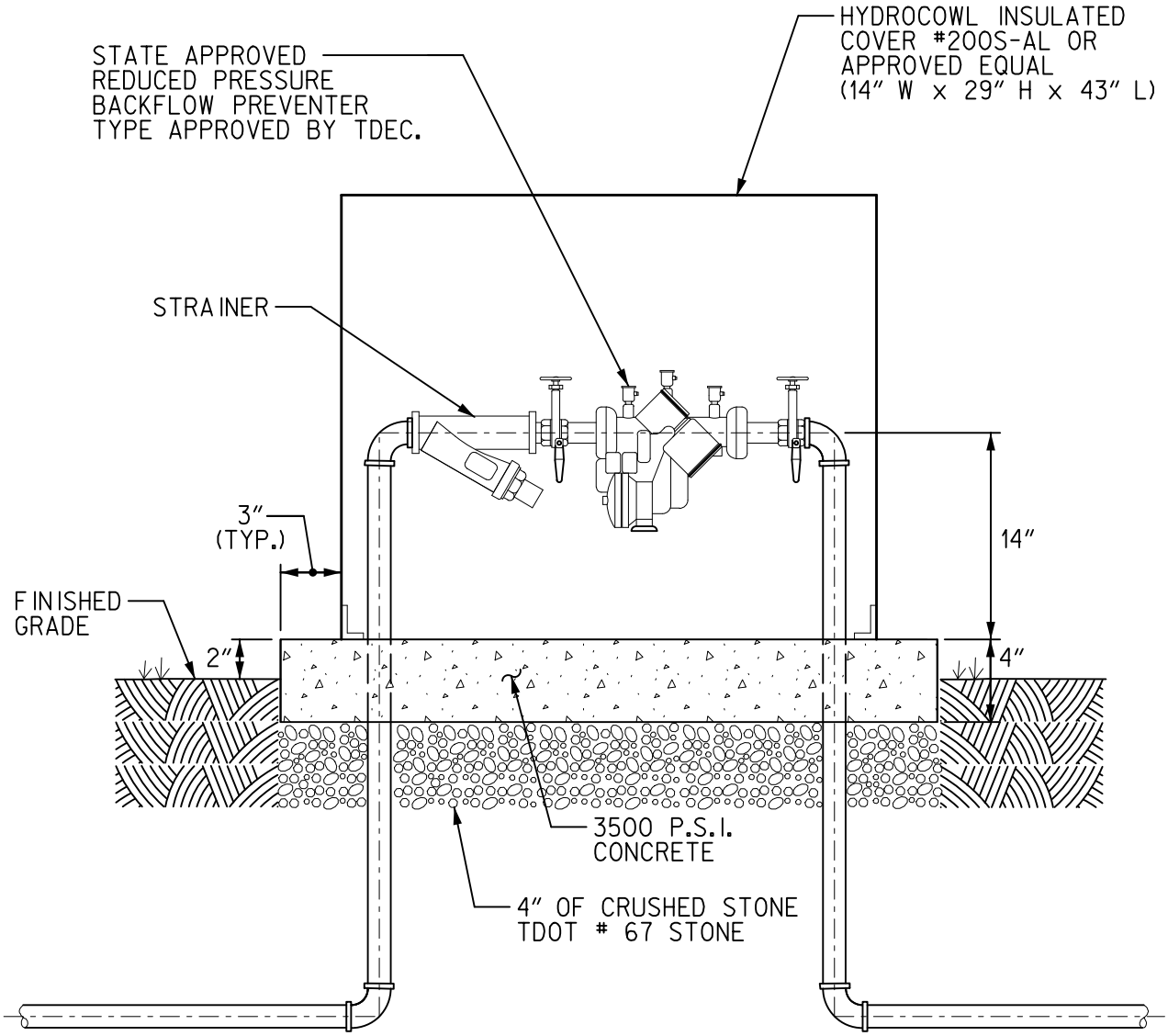

SECTION

NOTE:

1. MAINTAIN 5' CLEARANCE FROM TREES, WALLS, DRIVEWAYS, POLES, ETC.

(NOT TO SCALE)

HISTORIC FRANKLIN TENNESSEE

STANDARD DETAIL
WATER MANAGEMENT DEPARTMENT
CITY OF FRANKLIN, TENNESSEE

REDUCED PRESSURE BACKFLOW PREVENTER FOR 1.5" AND 2" LINES

W - 5

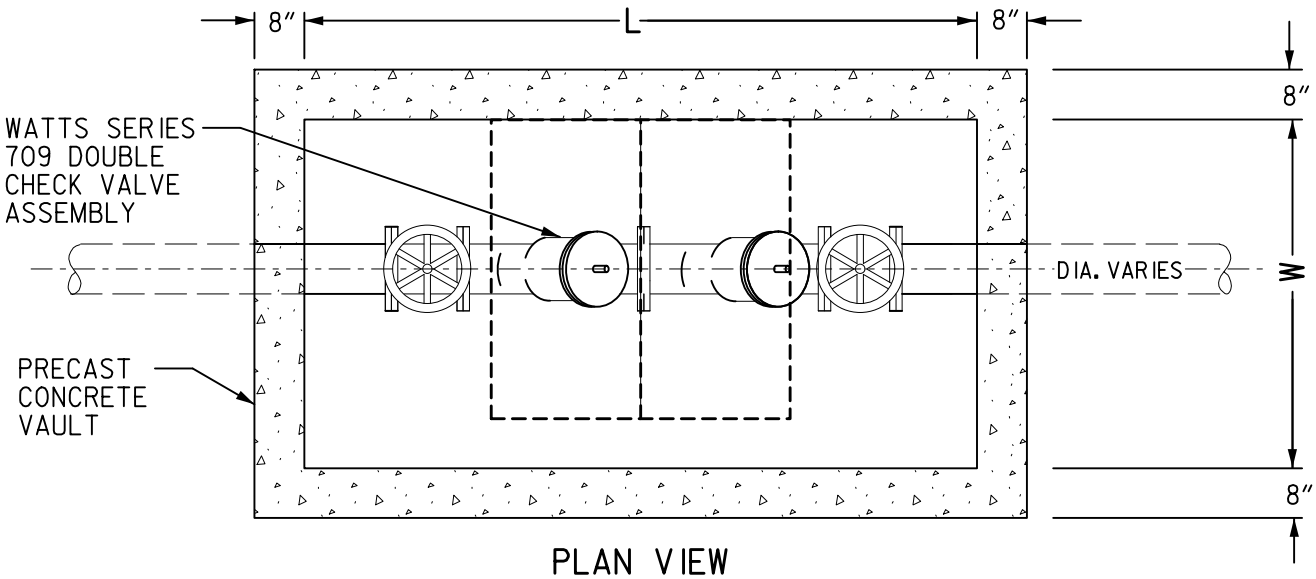

PLAN VIEW

Dia. (in)	L (in)	W (in)	MAX. FLOW (GPM)	ACCESS DOOR (ft)
4	72	48	500	4x4
6	84	48	1,200	4x4
8	96	60	1,500	4x6

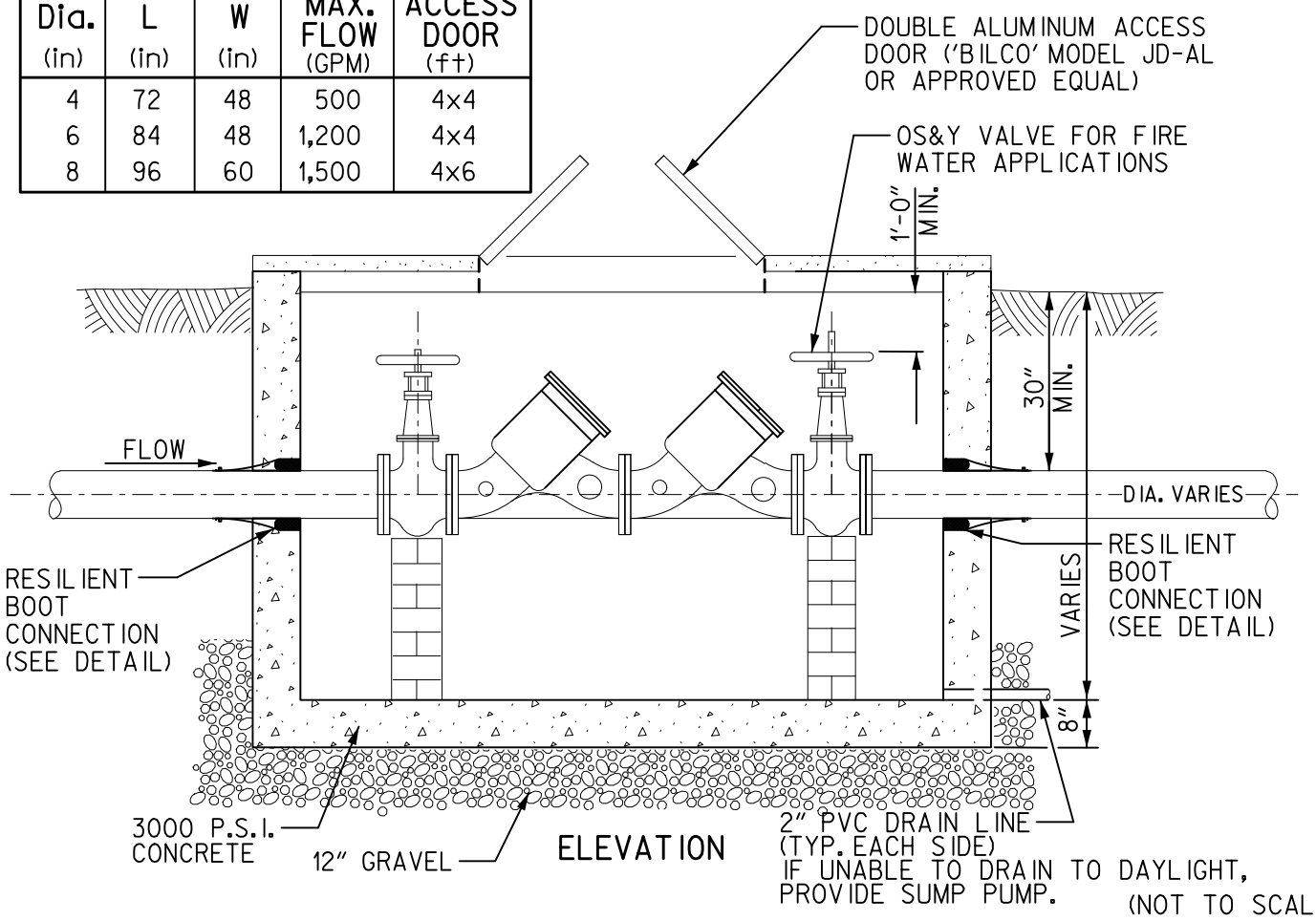

ELEVATION

(NOT TO SCALE)

HISTORIC FRANKLIN TENNESSEE

STANDARD DETAIL
WATER MANAGEMENT DEPARTMENT
CITY OF FRANKLIN, TENNESSEE

DOUBLE CHECK VALVE ASSEMBLY FOR 4" TO 8" LINES (BELOW GROUND)

W - 6

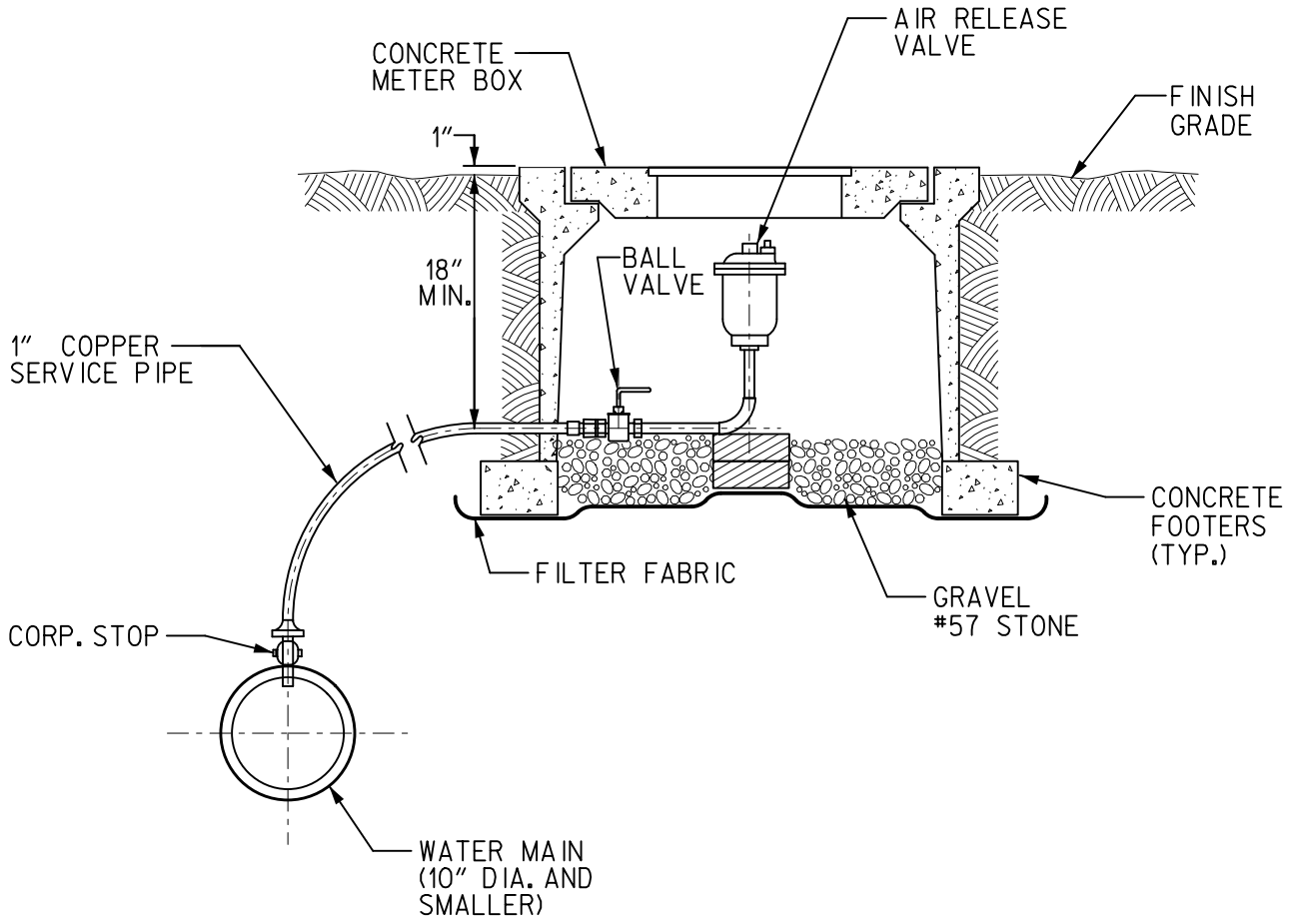

NOTES:

1. VALVE IS TO BE SIZED FOR CONDITIONS.
2. AIR RELEASE VALVES TO BE APCO 200A OR CRISPIN A.R. SERIES.
3. IF ASSEMBLY IS TO BE INSTALLED IN TRAFFIC AREA, BOX AND COVER TO BE TRAFFIC BEARING AS APPROVED BY CITY OF FRANKLIN.

(NOT TO SCALE)

HISTORIC FRANKLIN TENNESSEE

STANDARD DETAIL
WATER MANAGEMENT DEPARTMENT
CITY OF FRANKLIN, TENNESSEE

AIR RELEASE ASSEMBLY FOR WATER MAINS

W - 7

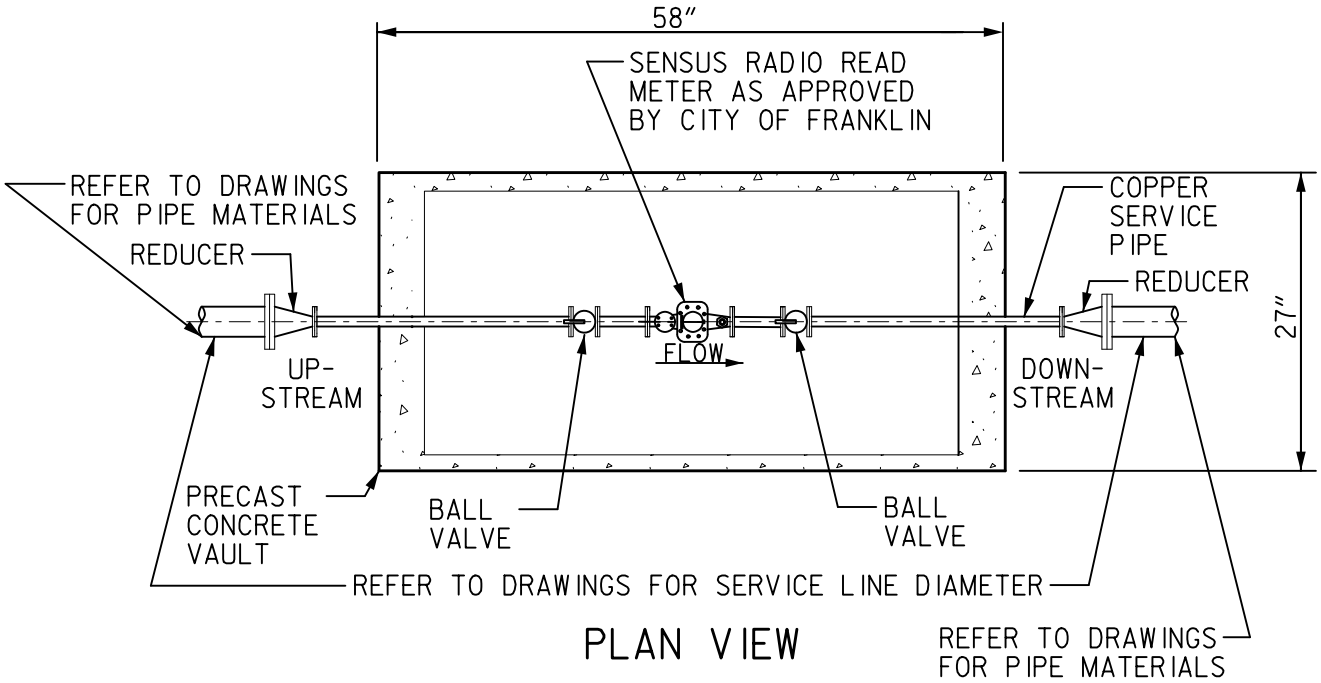

PLAN VIEW

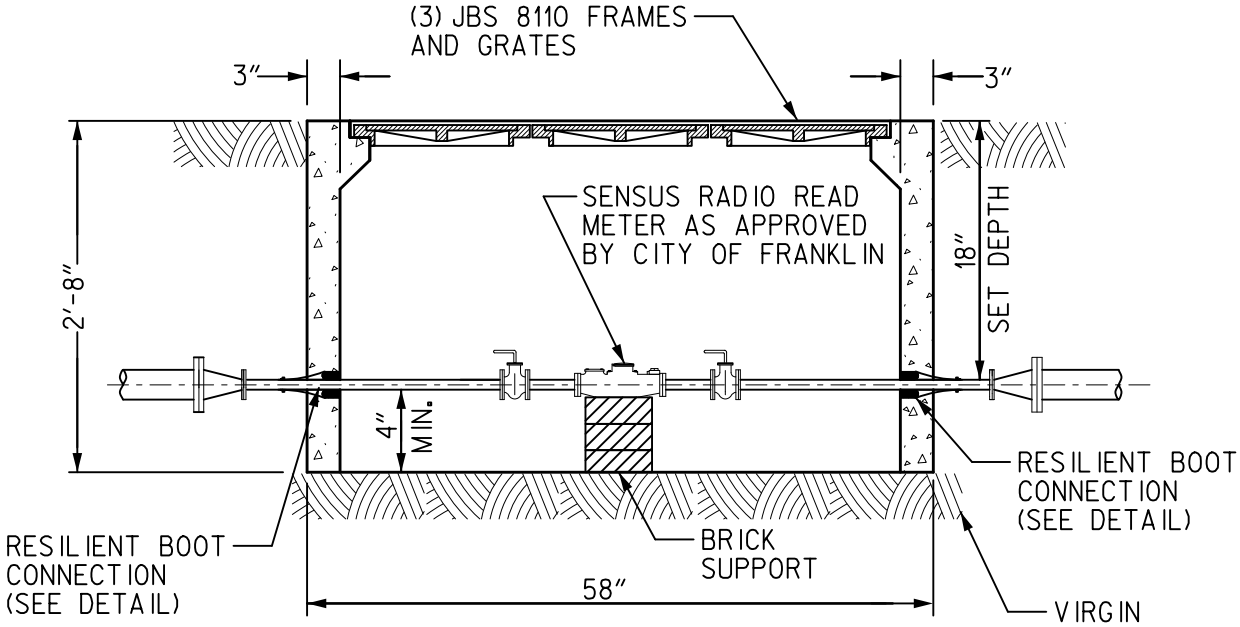

SECTION

NOTE:

ALL PRECAST COMPONENTS MEET OR EXCEED "SPECIFICATIONS FOR PRECAST REINFORCED CONCRETE MANHOLE SECTIONS" AS INDICATED BY ASTM C-478 LATEST REVISIONS.

(NOT TO SCALE)

HISTORIC FRANKLIN TENNESSEE

STANDARD DETAIL
WATER MANAGEMENT DEPARTMENT
CITY OF FRANKLIN, TENNESSEE

2" METER ASSEMBLY

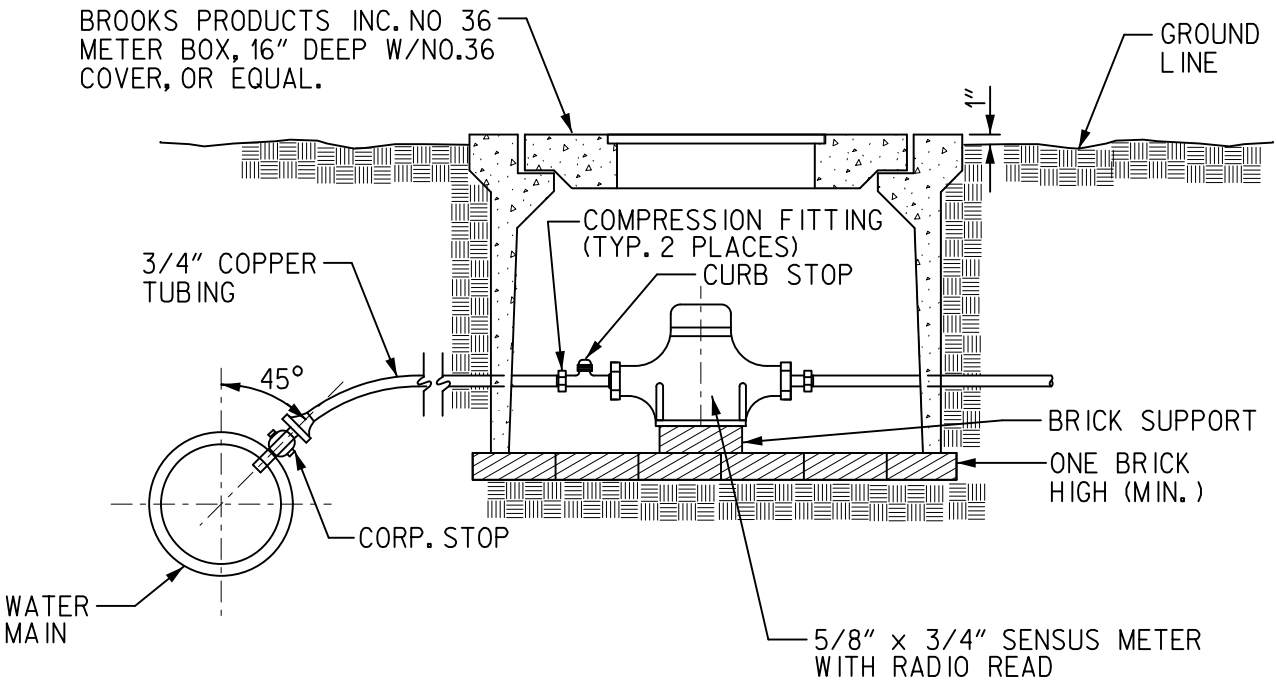

(NOT TO SCALE)

HISTORIC
FRANKLIN
TENNESSEE

STANDARD DETAIL
WATER MANAGEMENT DEPARTMENT
CITY OF FRANKLIN, TENNESSEE

3/4" WATER SERVICE ASSEMBLY

W - 9

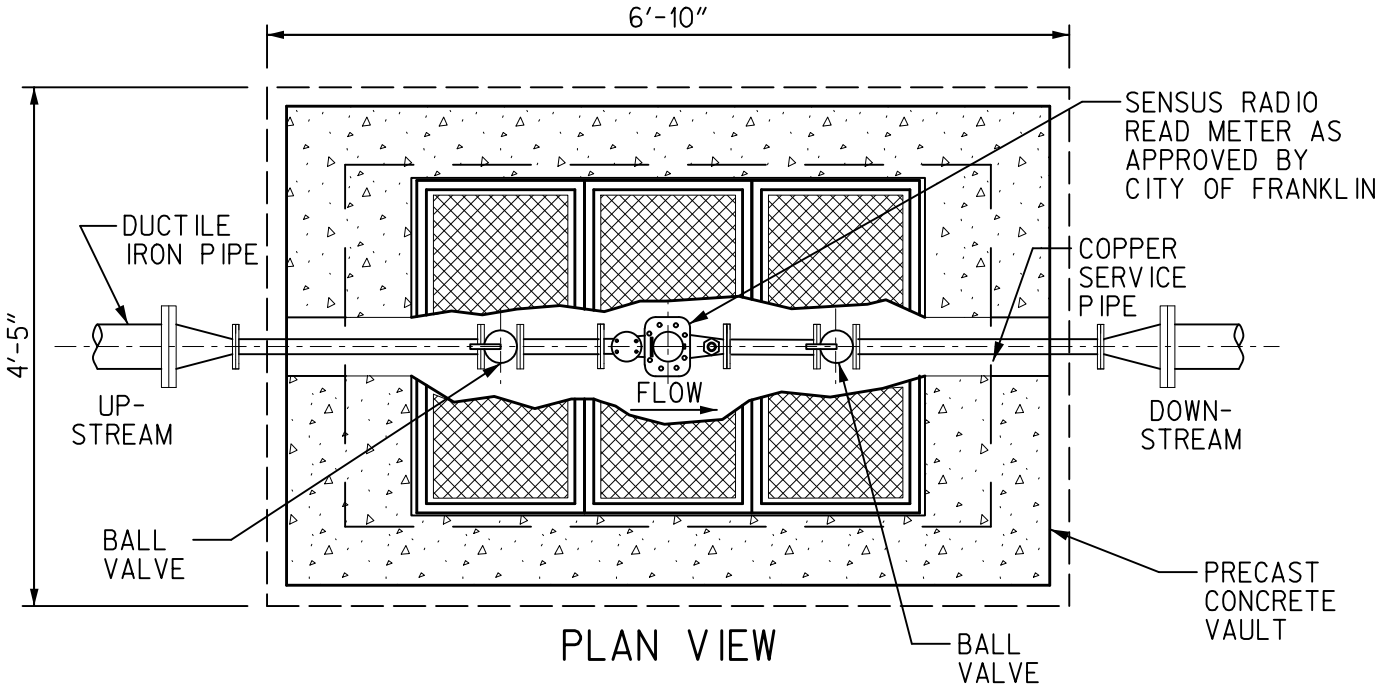

PLAN VIEW

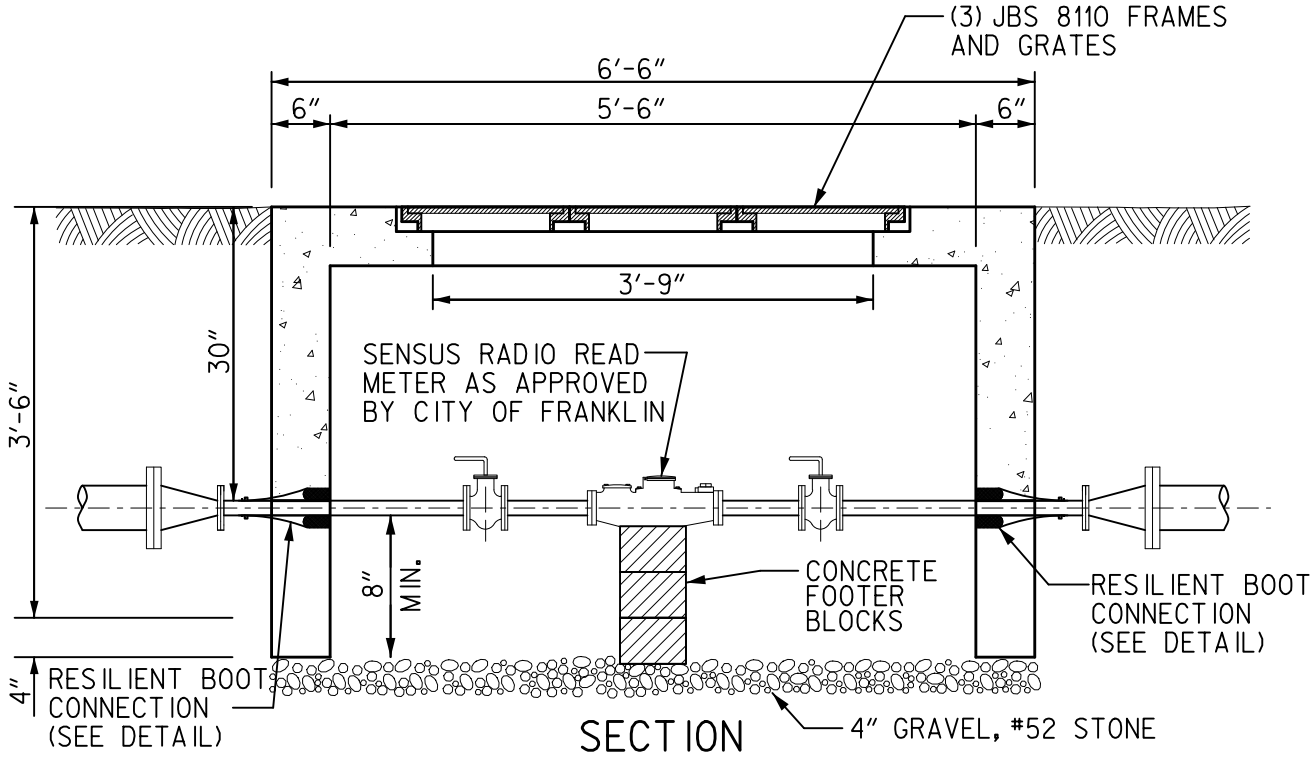

SECTION

NOTE:
ALL PRECAST COMPONENTS MEET OR EXCEED "SPECIFICATIONS FOR PRECAST REINFORCED CONCRETE MANHOLE SECTIONS" AS INDICATED BY ASTM C-478 LATEST REVISIONS.

(NOT TO SCALE)

HISTORIC FRANKLIN TENNESSEE

STANDARD DETAIL
WATER MANAGEMENT DEPARTMENT
CITY OF FRANKLIN, TENNESSEE

3" METER ASSEMBLY

W - 10

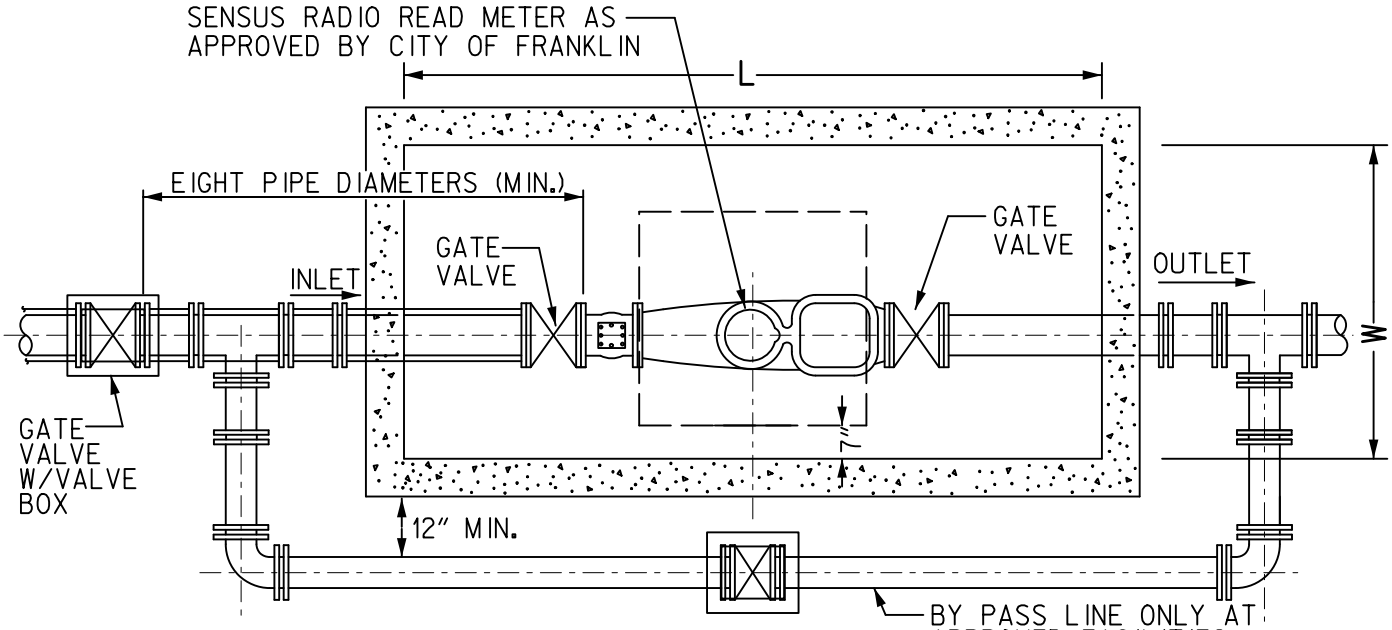

PLAN

Dia. (in)	L (in)	W (in)	MAX. FLOW (GPM)	ACCESS DOOR (ft)
4	60	48	500	4x4
6	72	48	1,200	4x4
8	84	60	1,500	4x6

NOTES:

1. ALL JOINTS SHALL BE MEGALUGS.
2. IF ASSEMBLY IS TO BE INSTALLED IN TRAFFIC AREA, BOX AND COVER TO BE TRAFFIC BEARING AS APPROVED BY CITY OF FRANKLIN.

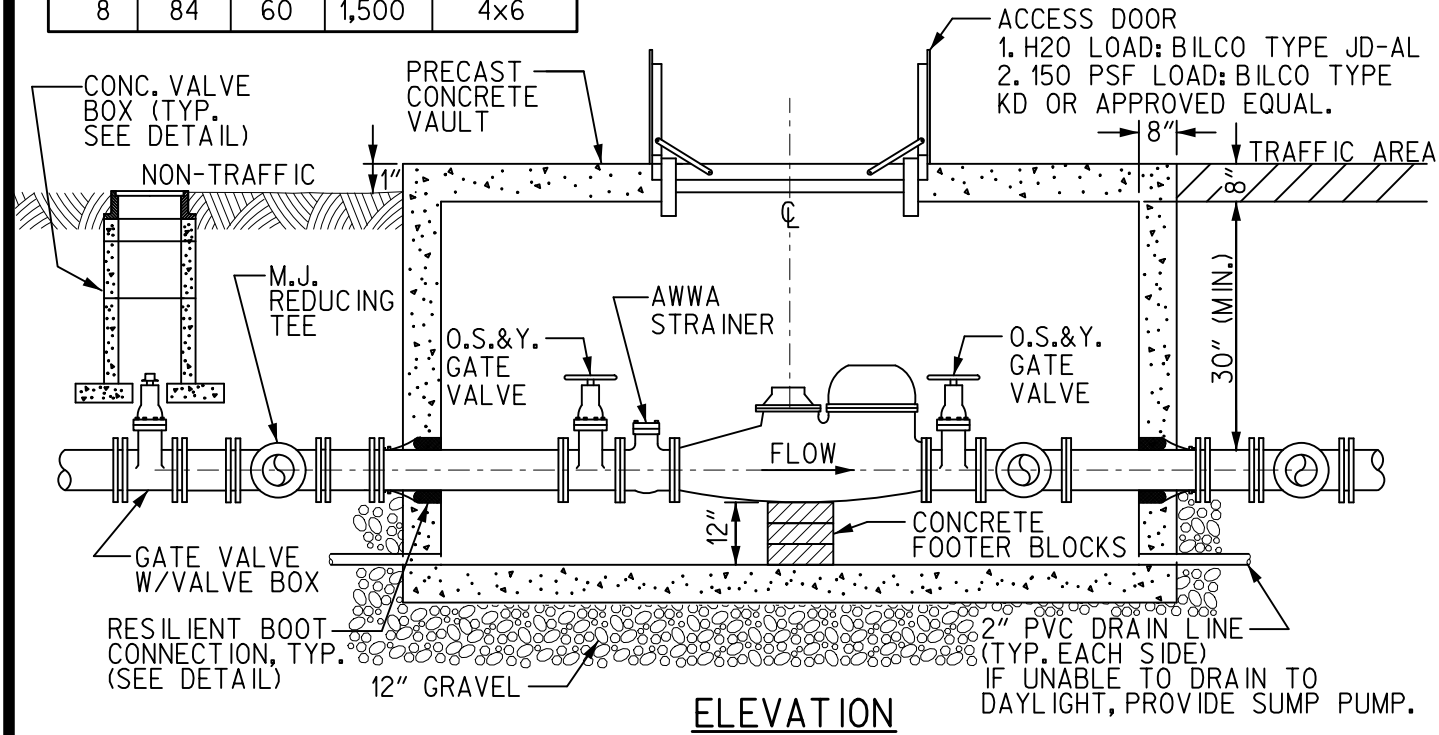

ELEVATION

(NOT TO SCALE)

HISTORIC FRANKLIN TENNESSEE

STANDARD DETAIL
WATER MANAGEMENT DEPARTMENT
CITY OF FRANKLIN, TENNESSEE

4" TO 8" COMPOUND METER ASSEMBLY

W - 11

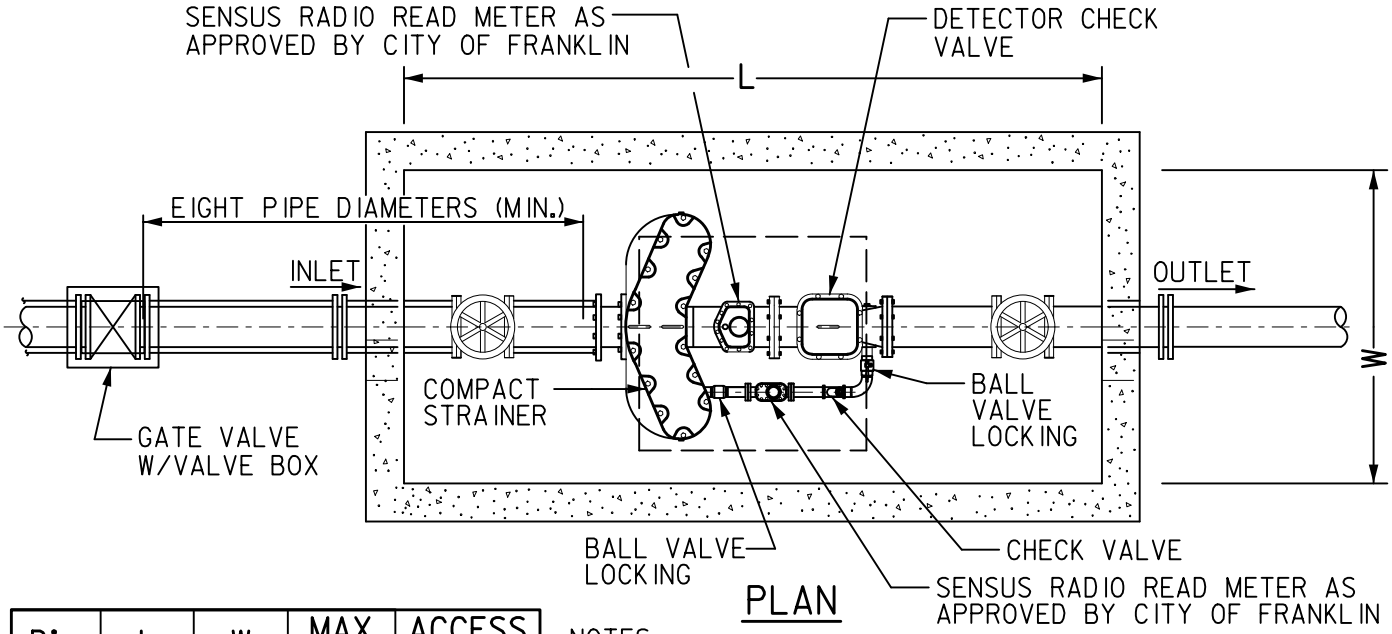

PLAN

Dia. (in)	L (in)	W (in)	MAX. FLOW (GPM)	ACCESS DOOR (ft)
4	60	48	500	4x4
6	72	48	1,200	4x4
8	84	60	1,500	4x6

NOTES:

1. ALL JOINTS SHALL BE MEGALUGS.
2. IF ASSEMBLY IS TO BE INSTALLED IN TRAFFIC AREA, BOX AND COVER TO BE TRAFFIC BEARING AS APPROVED BY CITY OF FRANKLIN.

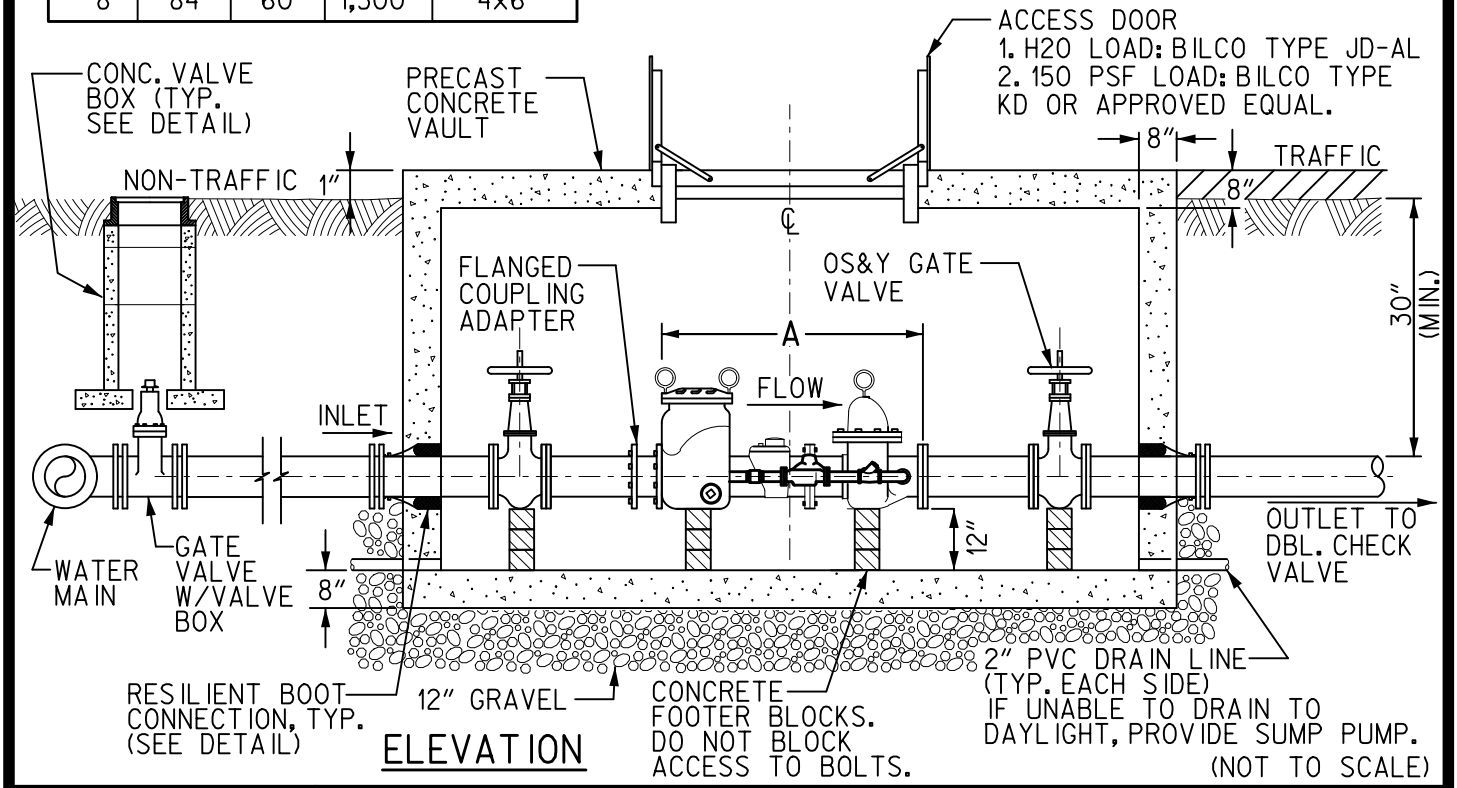

ELEVATION

(NOT TO SCALE)

HISTORIC FRANKLIN TENNESSEE

STANDARD DETAIL
WATER MANAGEMENT DEPARTMENT
CITY OF FRANKLIN, TENNESSEE

4" TO 8" FIRE METER ASSEMBLY

W - 12

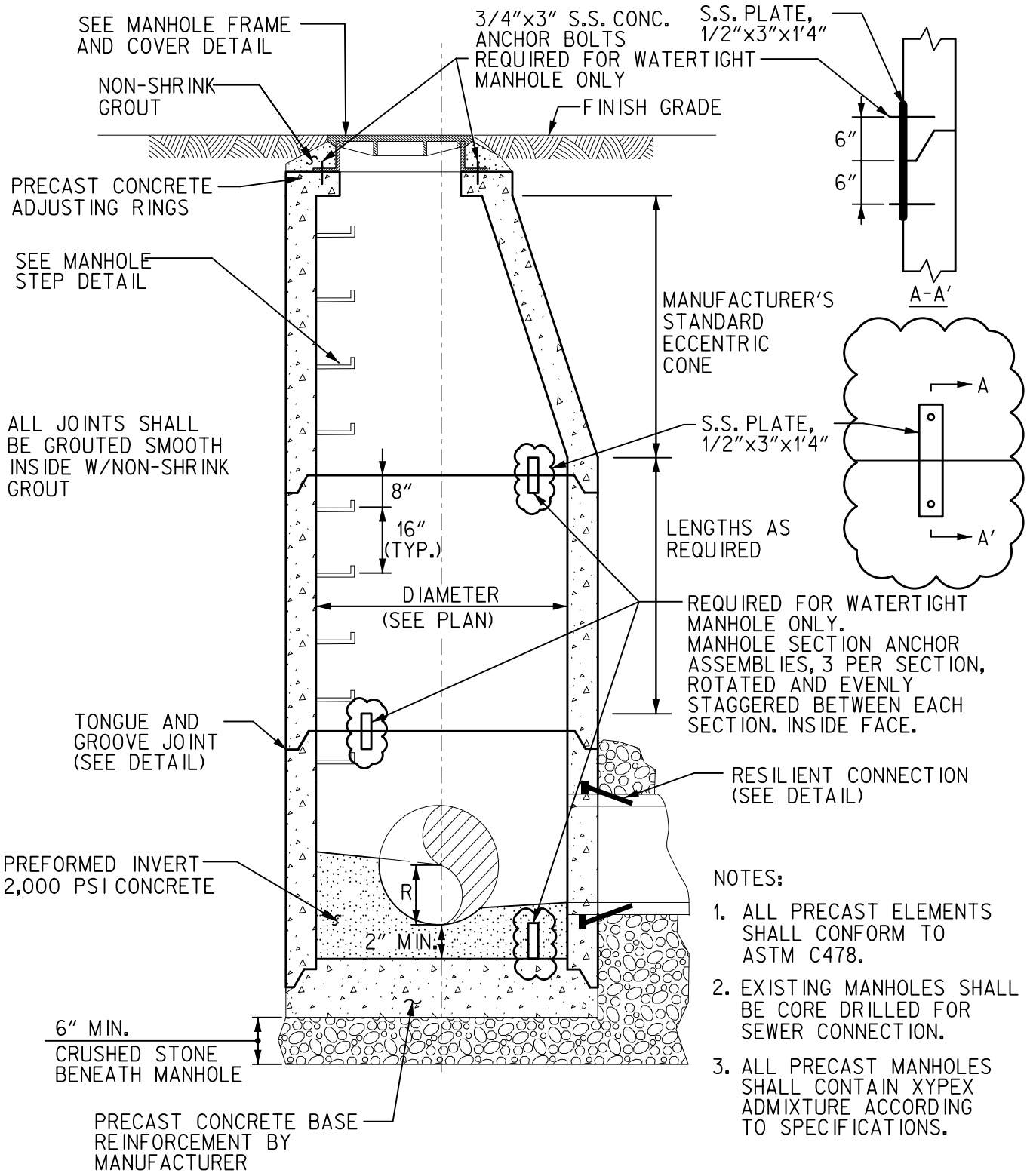

NOTES:

1. ALL PRECAST ELEMENTS SHALL CONFORM TO ASTM C478.
2. EXISTING MANHOLES SHALL BE CORE DRILLED FOR SEWER CONNECTION.
3. ALL PRECAST MANHOLES SHALL CONTAIN XYPEX ADMIXTURE ACCORDING TO SPECIFICATIONS.

(NOT TO SCALE)

HISTORIC FRANKLIN TENNESSEE

STANDARD DETAIL
WATER MANAGEMENT DEPARTMENT
CITY OF FRANKLIN, TENNESSEE

PRECAST CONCRETE MANHOLE

WW - 1

NOTE:
1/2" STEEL REINFORCED ROD ENCAPSULATED
IN POLYPROPYLENE PLASTIC OR EQUAL

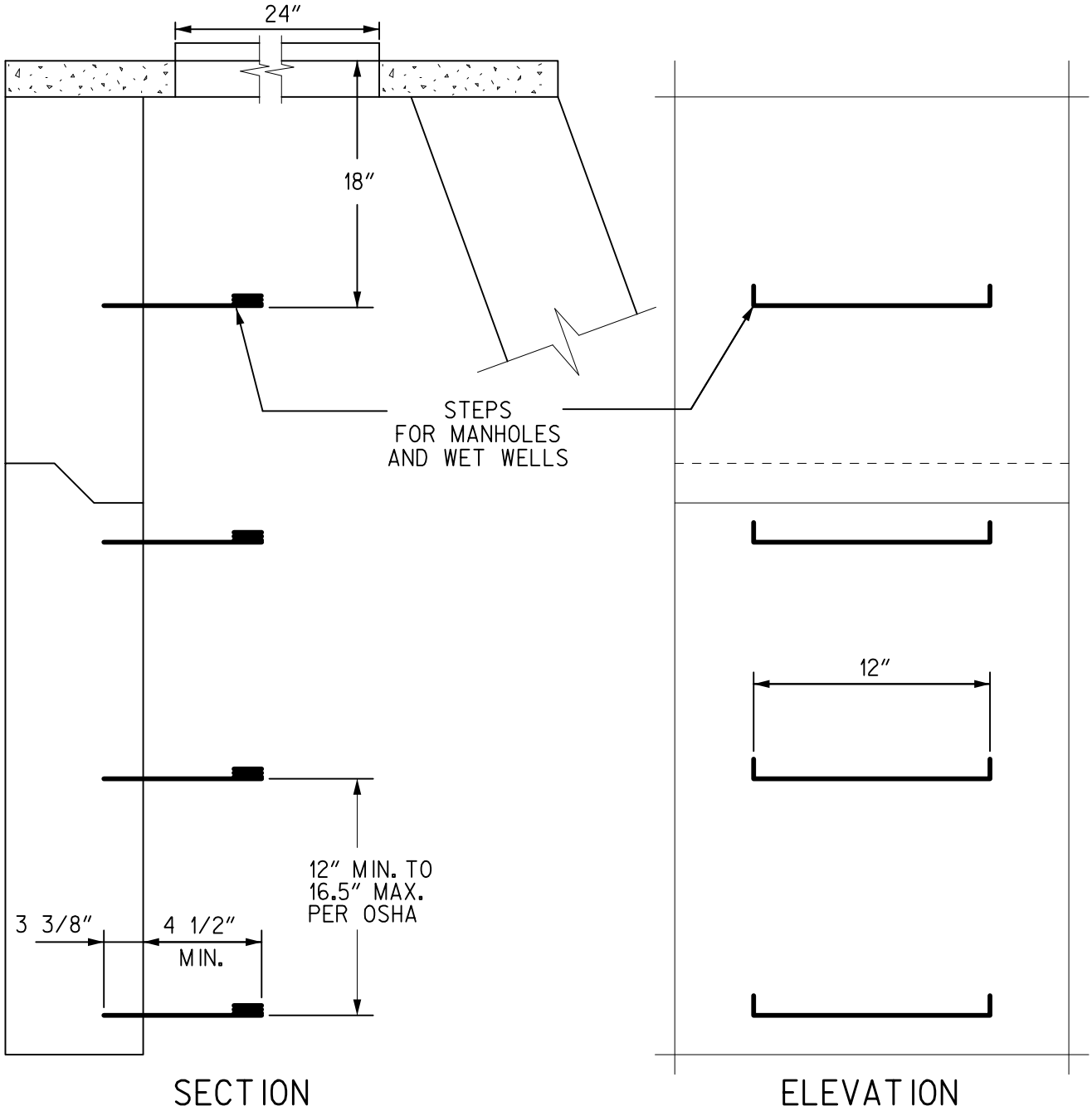

NOTE:
MANHOLE FRAME AND COVER SHALL ALIGN
WITH THE STEPS OVER THE BENCH OF THE
INVERT CHANNEL.

(NOT TO SCALE)

HISTORIC
FRANKLIN
TENNESSEE

STANDARD DETAIL
WATER MANAGEMENT DEPARTMENT
CITY OF FRANKLIN, TENNESSEE

MANHOLE STEPS

WW - 2

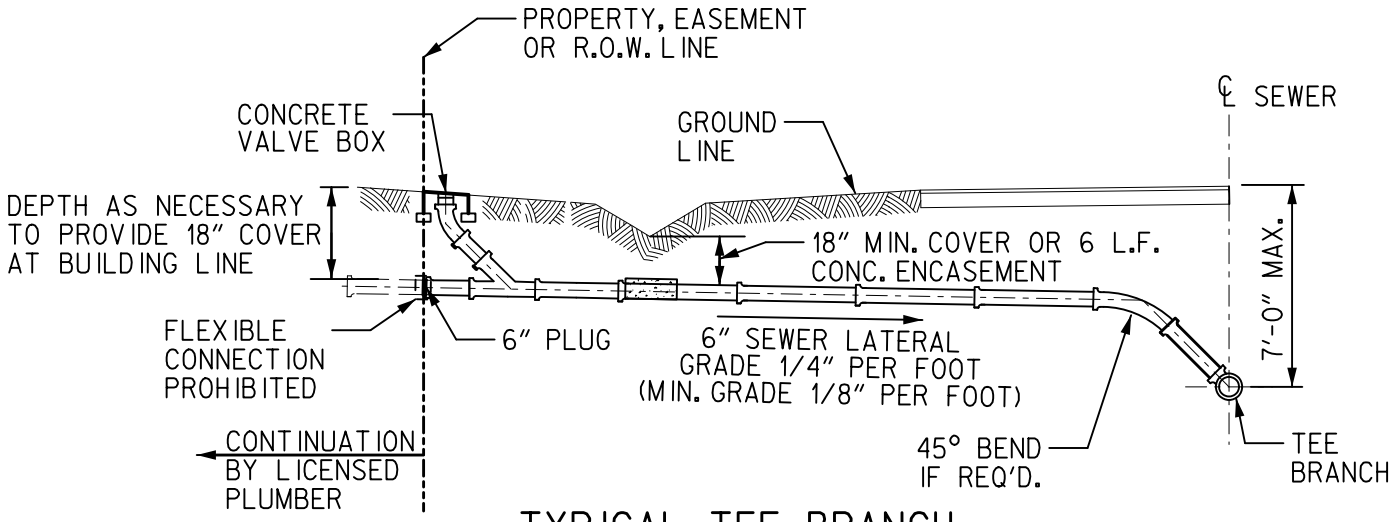

TYPICAL TEE BRANCH

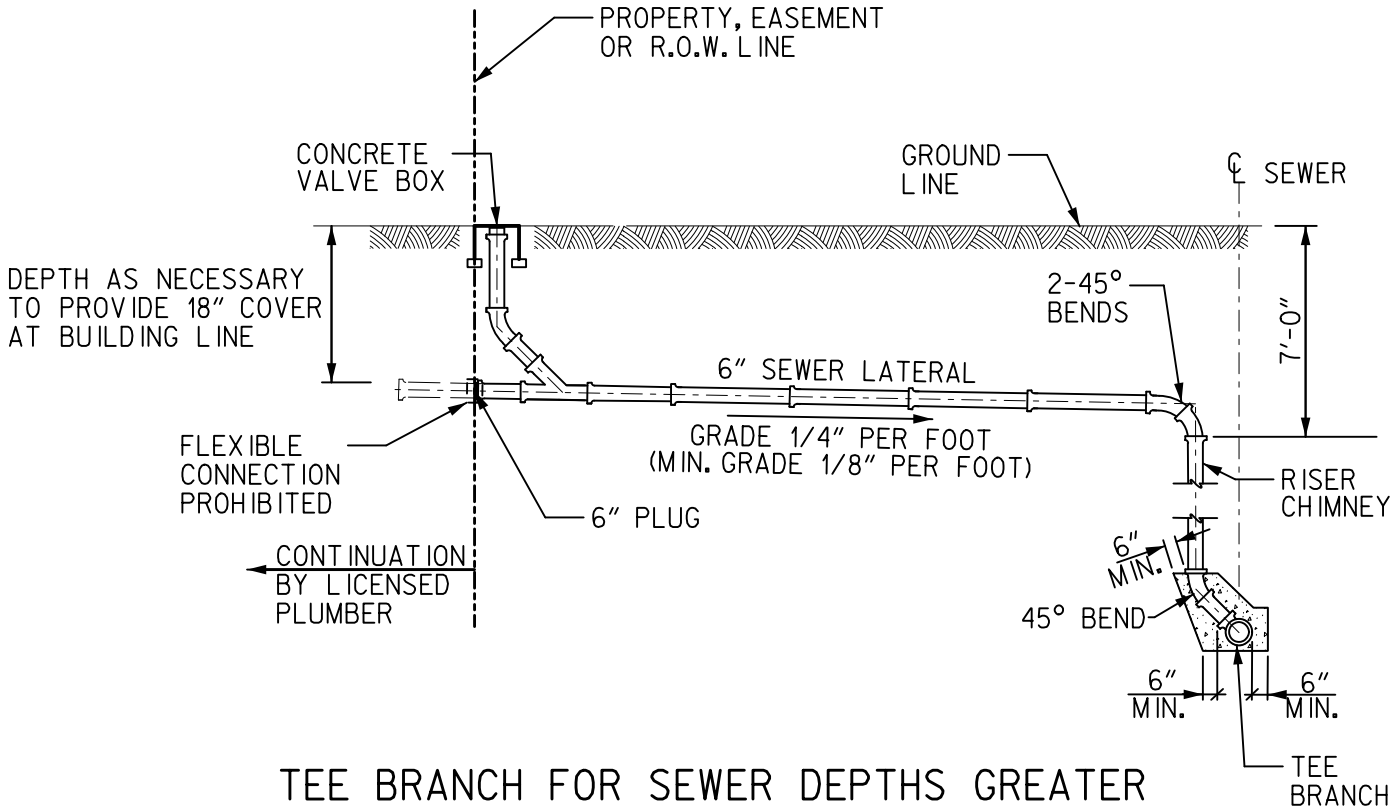

TEE BRANCH FOR SEWER DEPTHS GREATER THAN 7', (10" DIAMETER OR SMALLER)

(NOT TO SCALE)

HISTORIC
FRANKLIN
TENNESSEE

STANDARD DETAIL
WATER MANAGEMENT DEPARTMENT
CITY OF FRANKLIN, TENNESSEE

SANITARY SEWER LATERALS

WW - 3

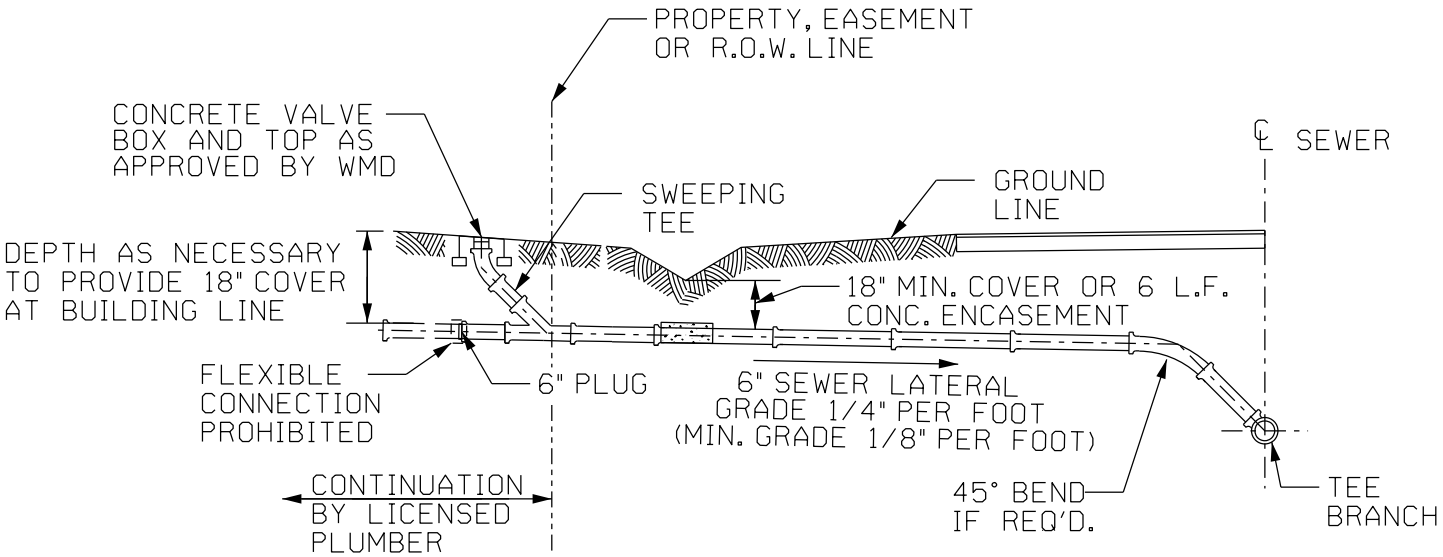

TYPICAL TEE BRANCH

(NOT TO SCALE)

HISTORIC
FRANKLIN
TENNESSEE

STANDARD DETAIL
WATER MANAGEMENT DEPARTMENT
CITY OF FRANKLIN, TENNESSEE

SANITARY SEWER LATERAL

WW - 3

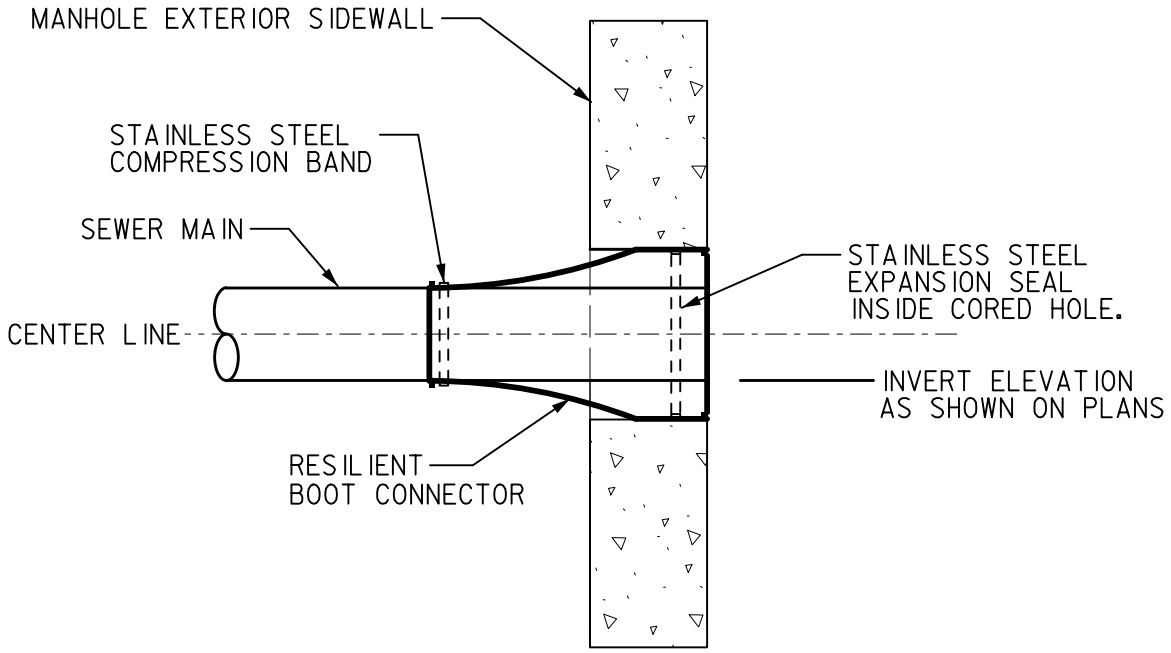

(NOT TO SCALE)

HISTORIC
FRANKLIN
TENNESSEE

STANDARD DETAIL
WATER MANAGEMENT DEPARTMENT
CITY OF FRANKLIN, TENNESSEE

RESILIENT BOOT MANHOLE CONNECTION

WW - 4

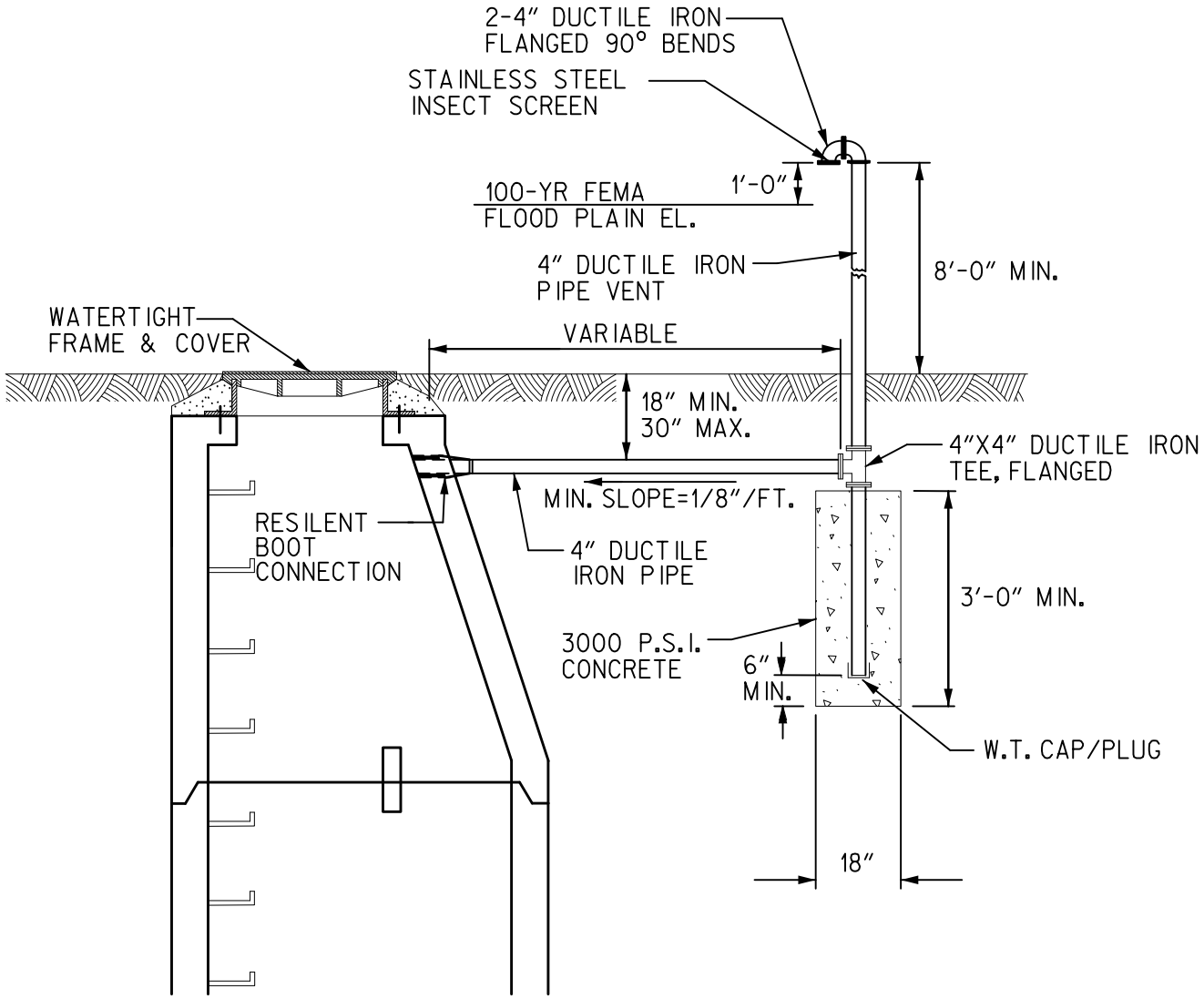

WATERTIGHT MANHOLE

NOTES:

1. VENT PIPE TO BE PAINTED WITH ONE COAT OF RED LEAD PRIMER, AND TWO COATS OF TNEMEC SERIES 66 GREEN ENAMEL (4-6 MILS DFT).

2. TOP OF VENT TO BE MINIMUM OF 8'-0" ABOVE GRADE OR HIGHER IF ELEVATION IS SHOWN ON PLANS.

3. VENT PIPE TO BE INSTALLED IN PRECAST HOLE IN CONE PROVIDED BY MANUFACTURER.

(NOT TO SCALE)

HISTORIC FRANKLIN TENNESSEE

STANDARD DETAIL
WATER MANAGEMENT DEPARTMENT
CITY OF FRANKLIN, TENNESSEE

MANHOLE VENT

WW - 5

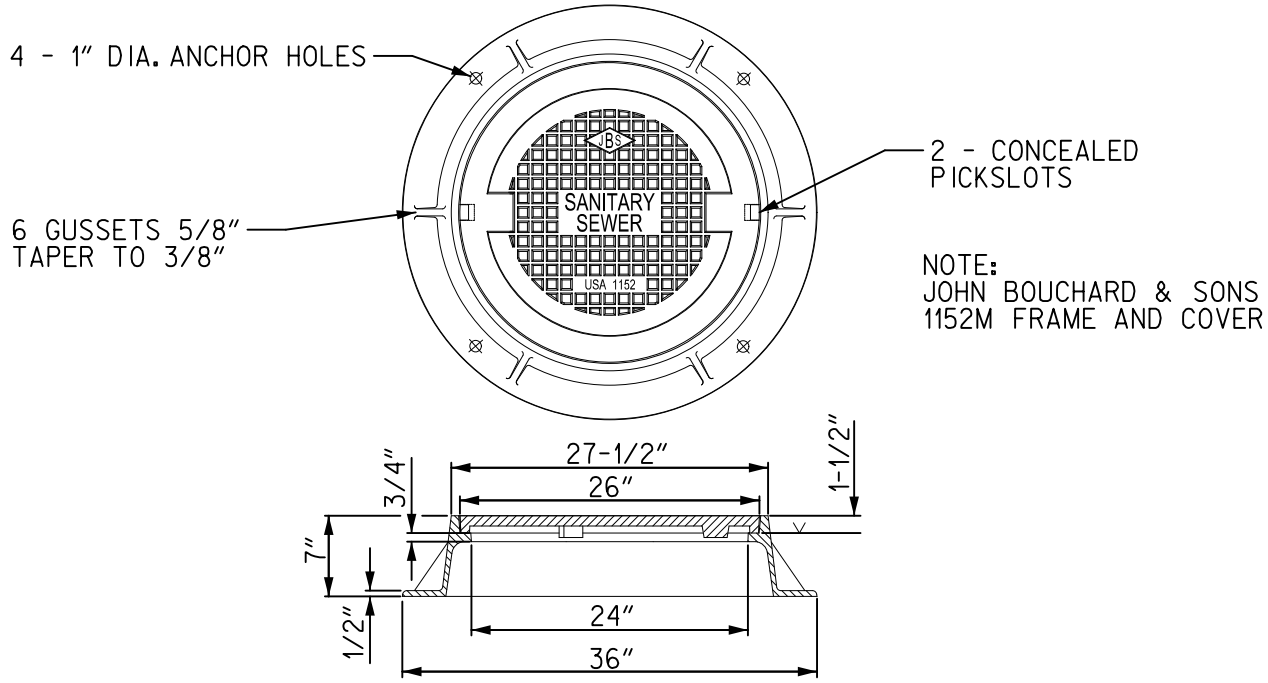

STANDARD

NOTE:
MANHOLES ON PRIVATE SANITARY SEWER SERVICE LINES SHALL BE LABELED "PRIVATE SANITARY SEWER".

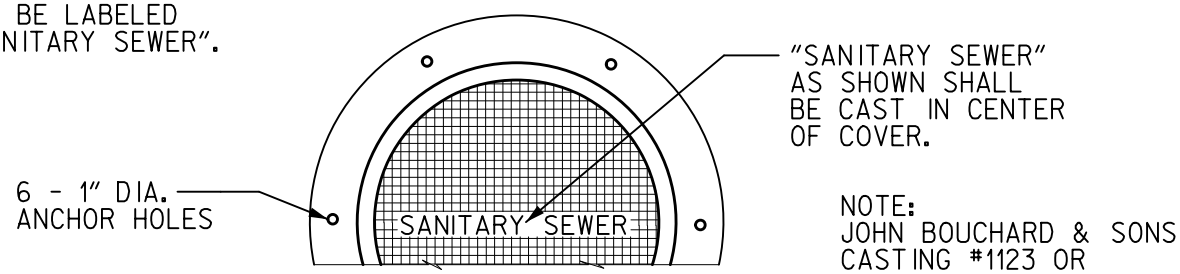

HALF PLAN

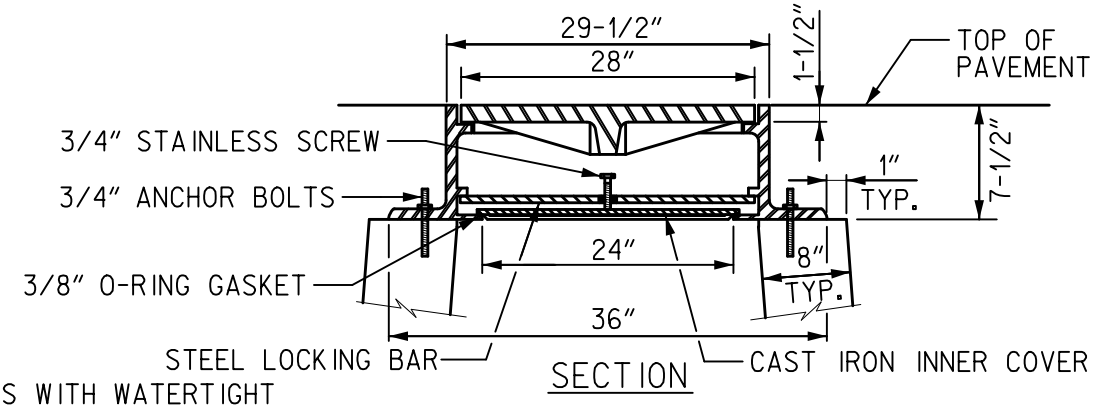

SECTION

NOTE:
MANHOLES WITH WATERTIGHT COVERS SHALL HAVE RISERS BOLTED TOGETHER WITH STAINLESS STEEL BOLTS AND PLATES, 3 PER JOINT.

WATERTIGHT

(NOT TO SCALE)

HISTORIC FRANKLIN TENNESSEE

STANDARD DETAIL
WATER MANAGEMENT DEPARTMENT
CITY OF FRANKLIN, TENNESSEE

MANHOLE FRAME AND COVER

WW - 6

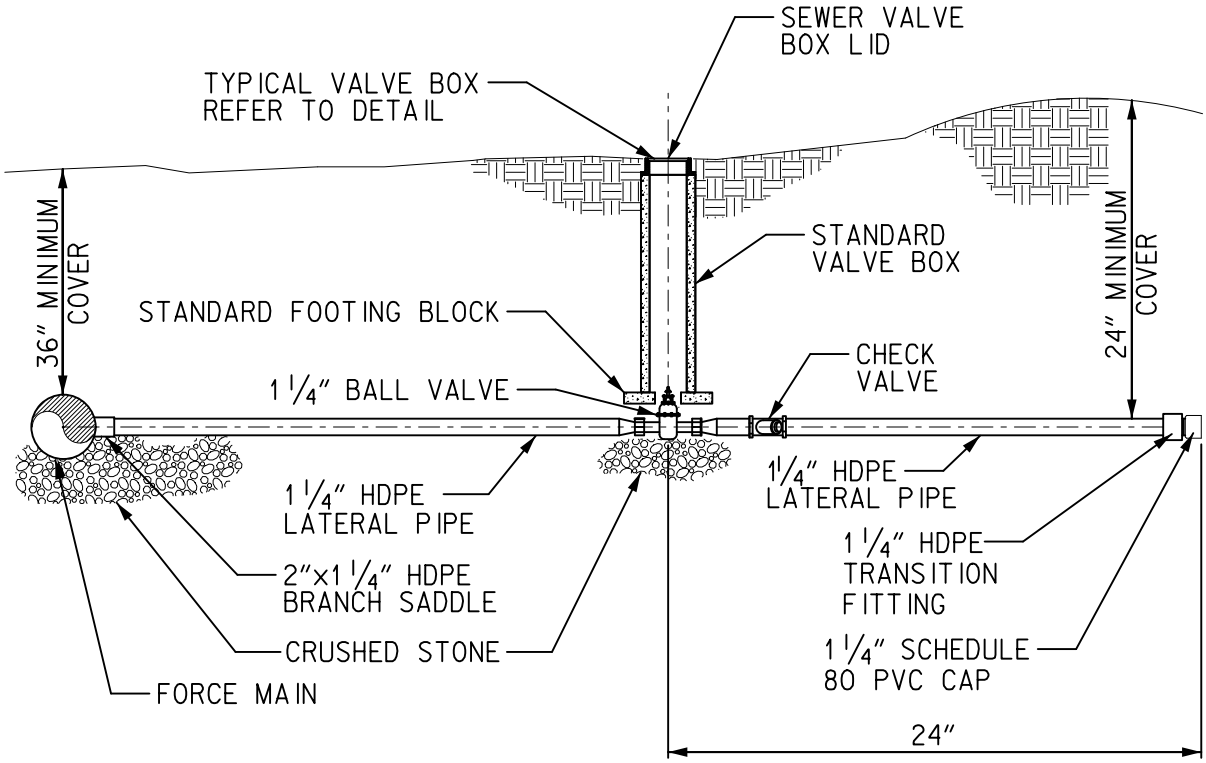

(NOT TO SCALE)

HISTORIC FRANKLIN TENNESSEE

STANDARD DETAIL
WATER MANAGEMENT DEPARTMENT
CITY OF FRANKLIN, TENNESSEE

LATERAL SERVICE CONNECTION TO NEW SANITARY SEWER FORCE MAIN

WW - 7

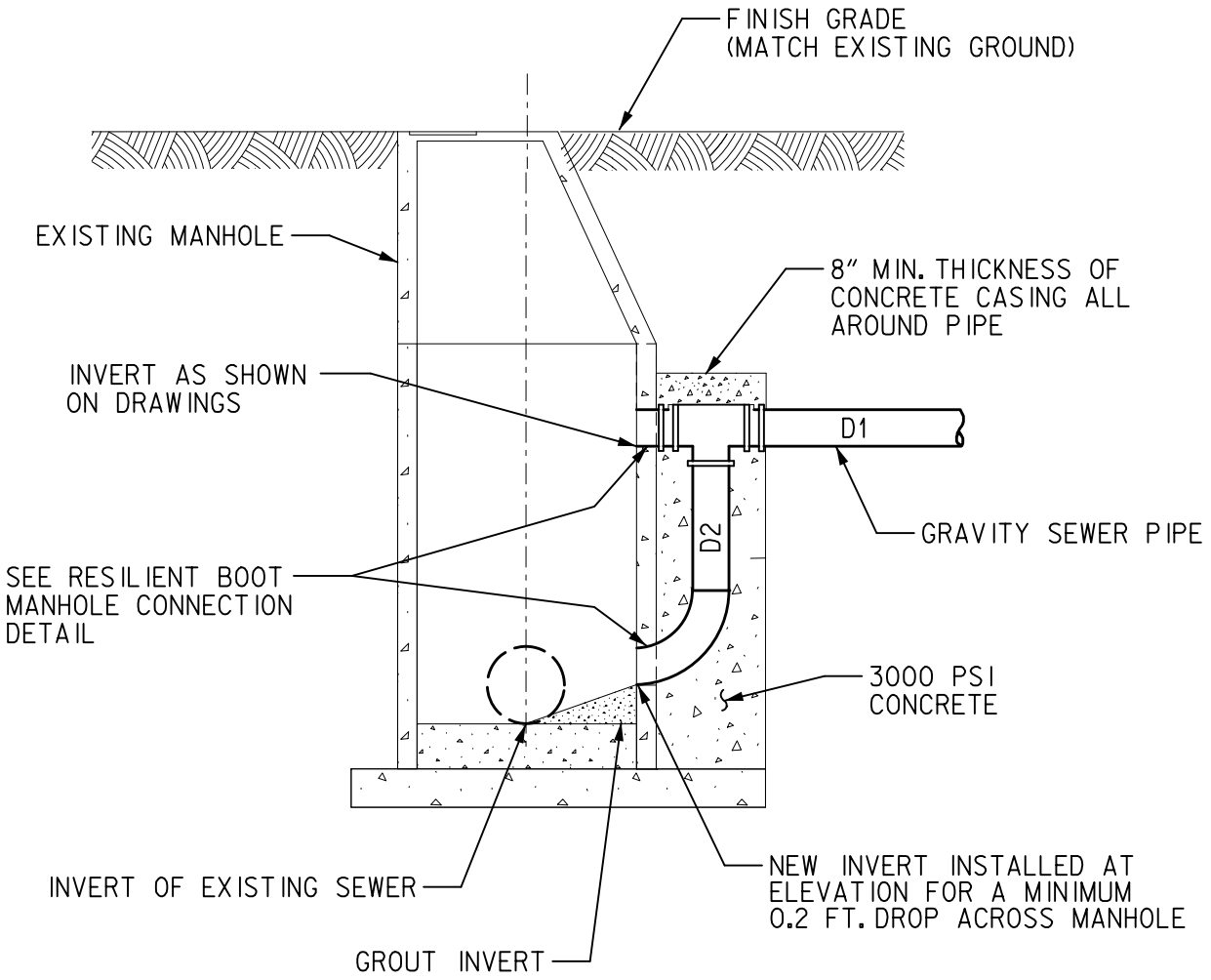

NOTE:
D2 PIPE MATERIAL SHALL BE CONSISTENT WITH D1 PIPE MATERIAL.

D1	D2
8"	8"
10"	8"
12"	10"
15"	12"
18"	12"
>18"	Contact Owner

(NOT TO SCALE)

HISTORIC FRANKLIN TENNESSEE

STANDARD DETAIL
WATER MANAGEMENT DEPARTMENT
CITY OF FRANKLIN, TENNESSEE

DROP CONNECTION TO EXISTING MANHOLE

WW - 8

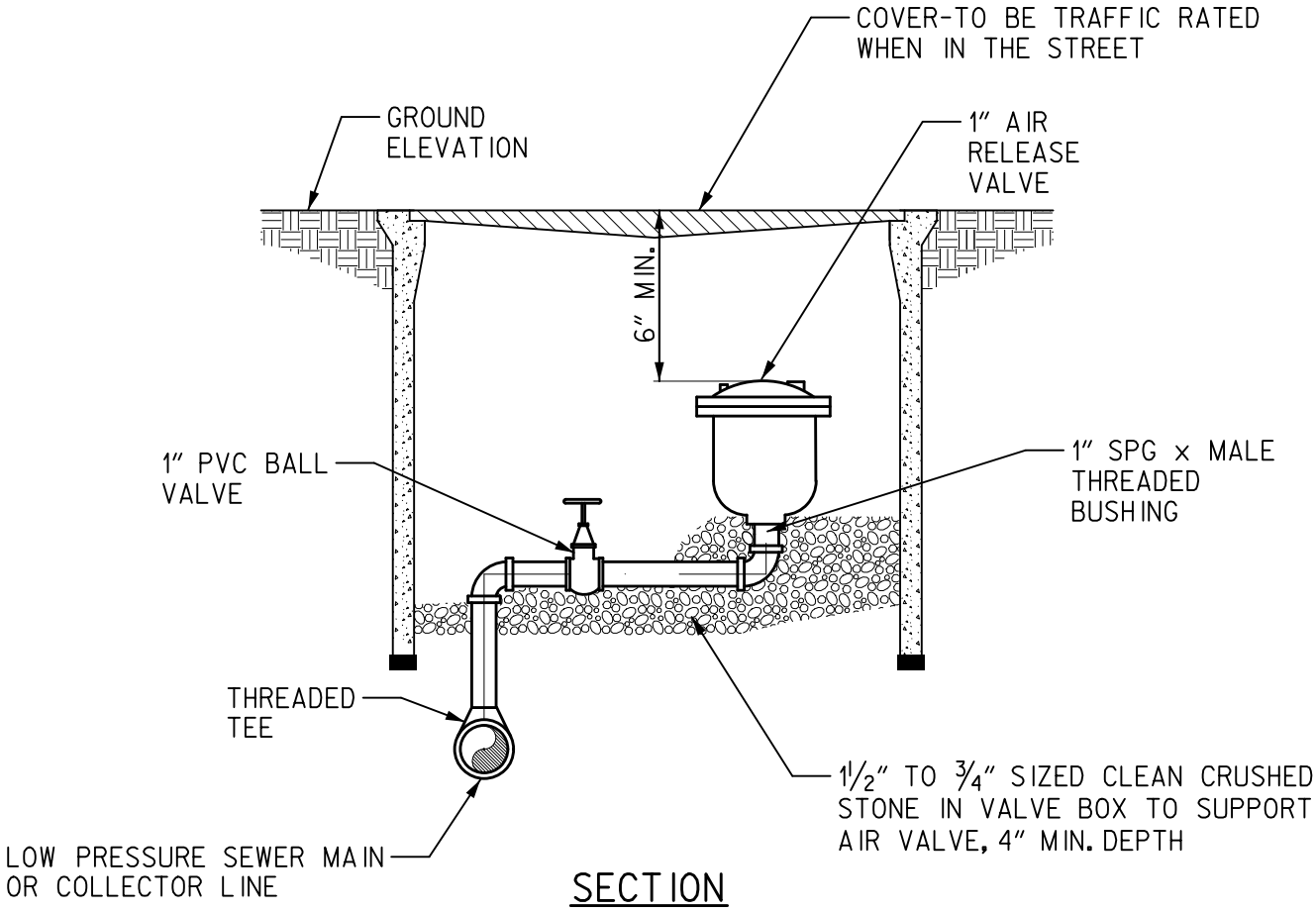

SECTION

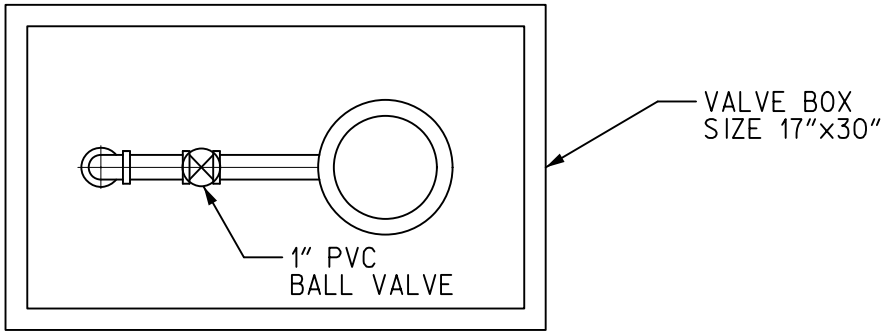

PLAN VIEW

(NOT TO SCALE)

HISTORIC FRANKLIN TENNESSEE

STANDARD DETAIL
WATER MANAGEMENT DEPARTMENT
CITY OF FRANKLIN, TENNESSEE

1" AUTO AIR RELEASE VALVE ON LOW PRESSURE SANITARY SEWER MAIN

WW - 9

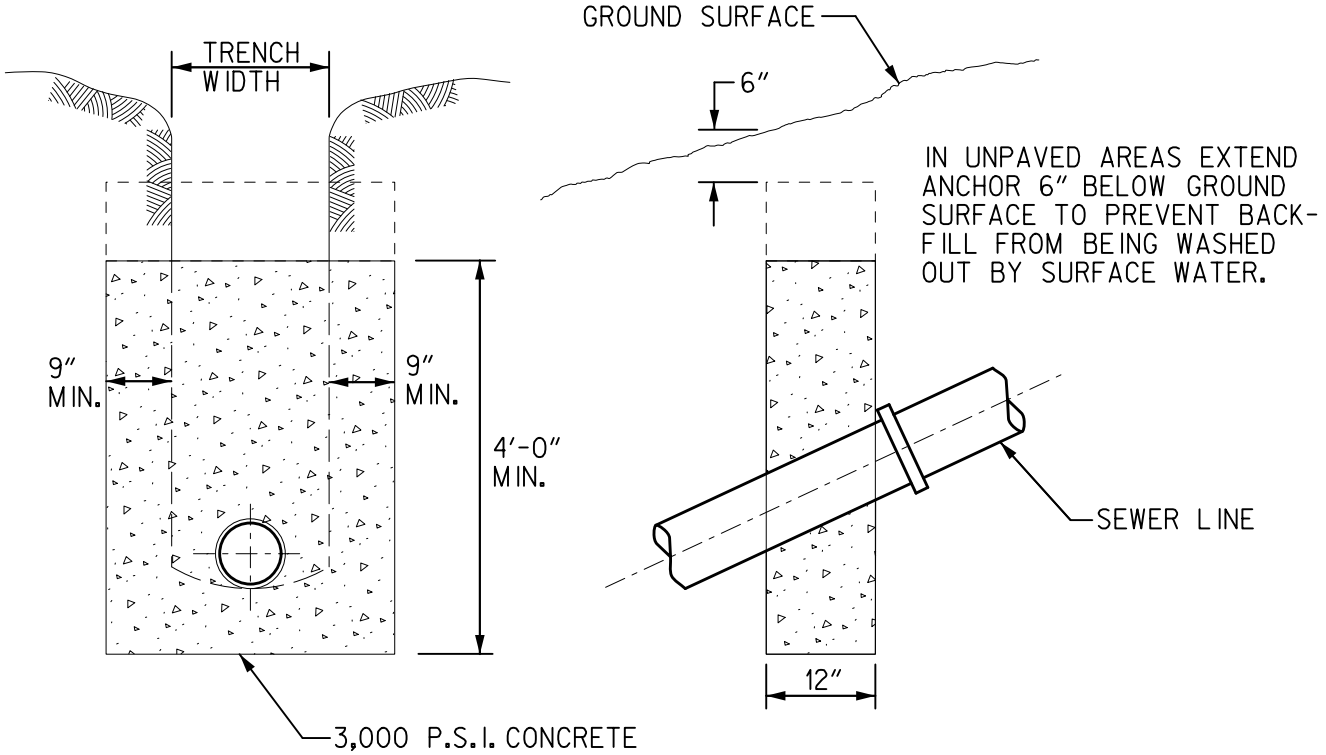

NOTES:

1. PROVIDE NO ANCHOR ON GRADES LESS THAN 18% UNLESS NOTED.
2. PROVIDE ANCHOR 36′ CENTER TO CENTER ON GRADES BETWEEN 18% AND 25%.
3. PROVIDE ANCHOR 24′ CENTER TO CENTER ON GRADES BETWEEN 25% AND 35%.
4. PROVIDE ANCHOR 16′ CENTER TO CENTER ON GRADES 35% AND GREATER.
5. CONTRACTOR MAY SUBMIT ALTERNATE DESIGN UTILIZING ROCK BOLTS TO KEY ANCHOR TO ROCK TRENCH.
6. FOR CONDITIONS OTHER THAN SHOWN HEREON, ANCHORS SHALL BE PROVIDED AS REQUIRED BY THE CONTRACT PLANS OR ORDERED BY THE ENGINEER.

(NOT TO SCALE)

HISTORIC FRANKLIN TENNESSEE

STANDARD DETAIL
WATER MANAGEMENT DEPARTMENT
CITY OF FRANKLIN, TENNESSEE

CONCRETE ANCHORS FOR SEWERS ON STEEP GRADES

WW - 10

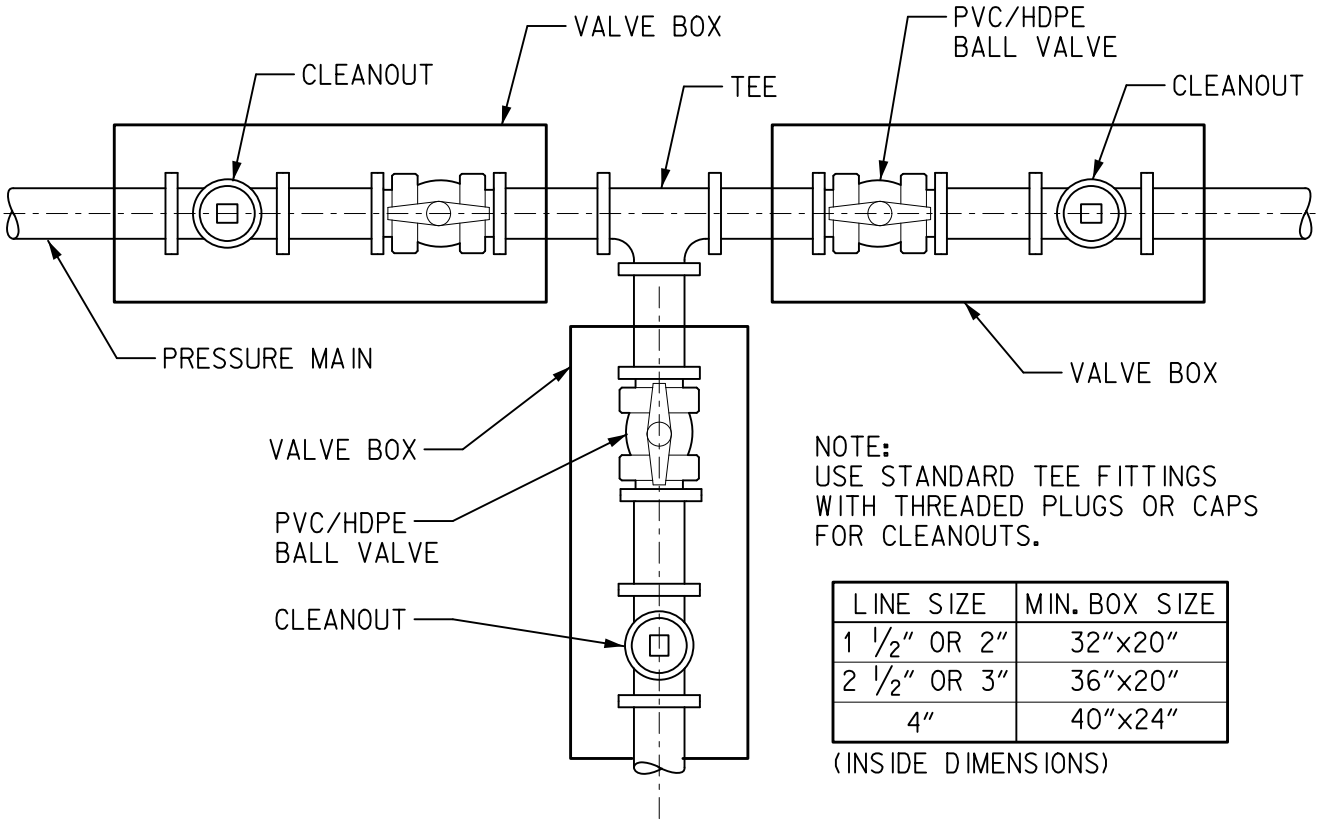

NOTE:
USE STANDARD TEE FITTINGS WITH THREADED PLUGS OR CAPS FOR CLEANOUTS.

LINE SIZE	MIN. BOX SIZE
1 1/2" OR 2"	32"x20"
2 1/2" OR 3"	36"x20"
4"	40"x24"

(INSIDE DIMENSIONS)

PLAN

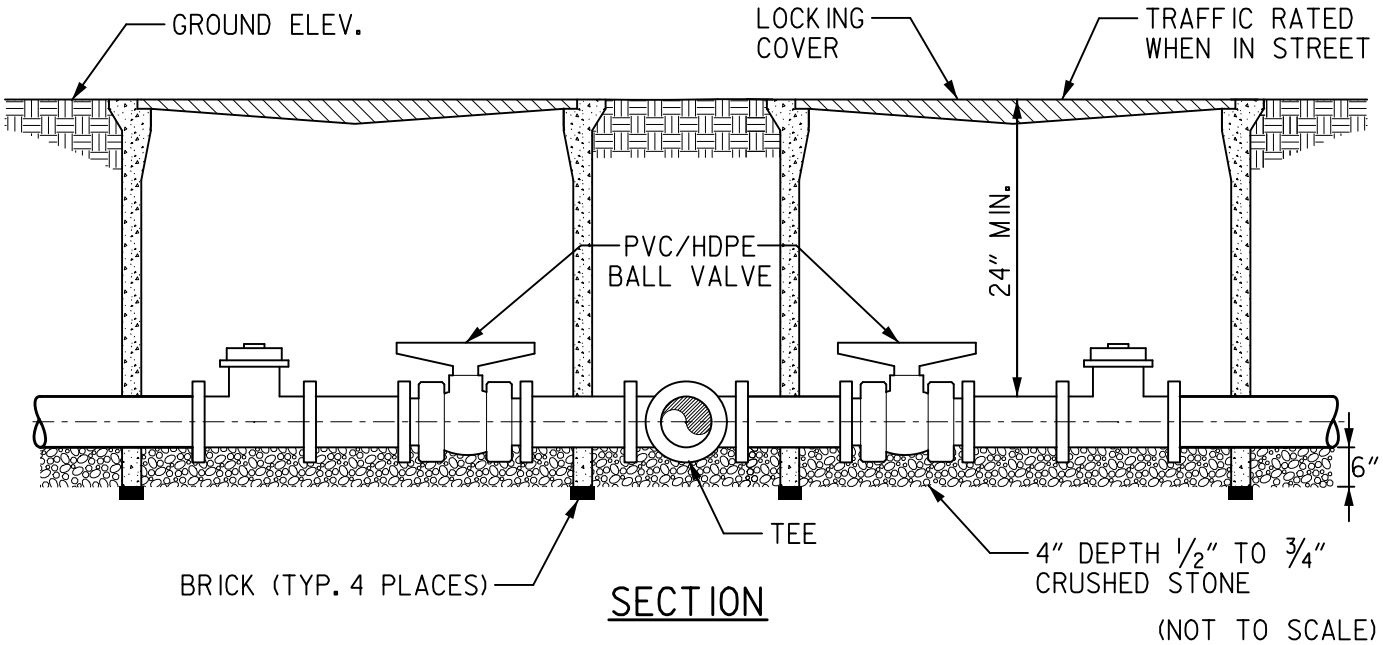

SECTION

(NOT TO SCALE)

HISTORIC FRANKLIN TENNESSEE

STANDARD DETAIL
WATER MANAGEMENT DEPARTMENT
CITY OF FRANKLIN, TENNESSEE

VALVE BOX & CLEANOUT ARRANGEMENT AT JUNCTION OF LOW PRESSURE MAINS

WW - 11

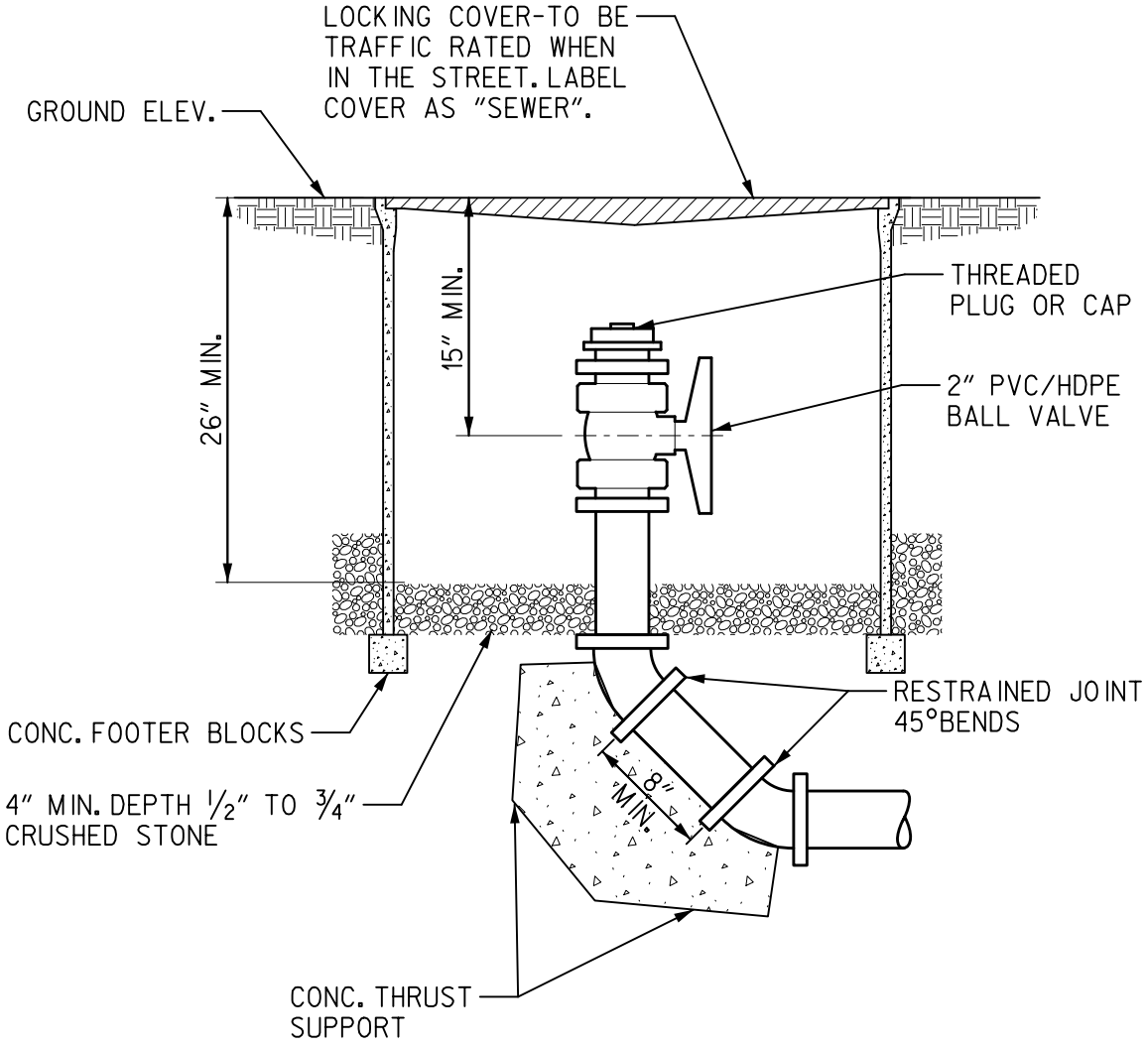

(NOT TO SCALE)

HISTORIC FRANKLIN TENNESSEE

STANDARD DETAIL
WATER MANAGEMENT DEPARTMENT
CITY OF FRANKLIN, TENNESSEE

LOW PRESSURE SEWER SYSTEM END OF LINE FLUSHING ASSEMBLY

WW - 12

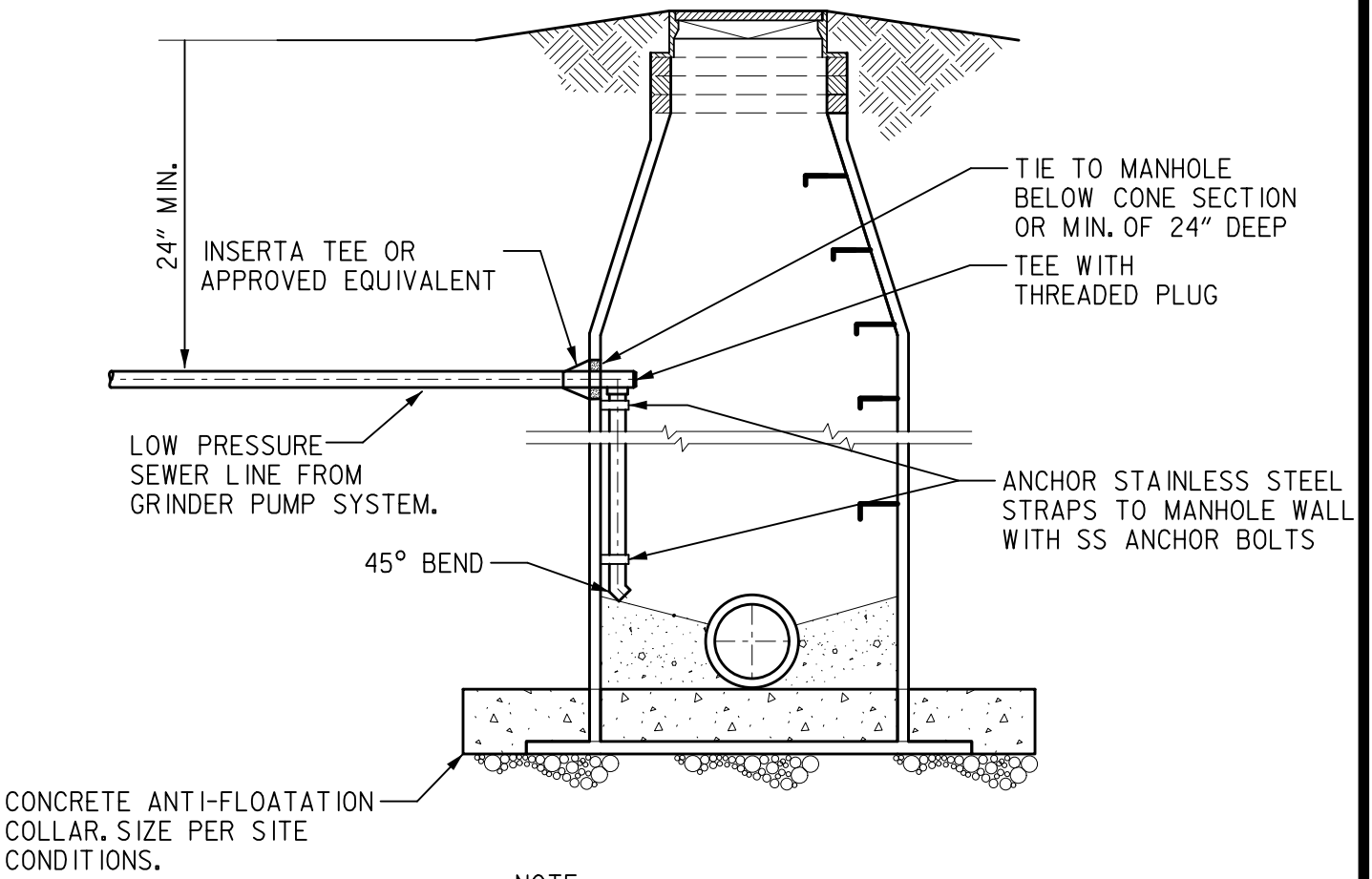

NOTE:

A FIBERGLASS MANHOLE IS REQUIRED WHEN A SEWER FORCE MAIN CONNECTS TO A GRAVITY SEWER SYSTEM.

(NOT TO SCALE)

HISTORIC FRANKLIN TENNESSEE

STANDARD DETAIL
WATER MANAGEMENT DEPARTMENT
CITY OF FRANKLIN, TENNESSEE

LOW PRESSURE SEWER CONNECTION TO FIBERGLASS MANHOLE

WW - 13