ADDENDUM NO. 1

City of Franklin Engineering Department 109 Third Avenue South, Suite 133 Franklin, TN 37064	Project:	SR-96 West Multi-Use Trail - Phases 1 & 2
	PIN:	123098.00
	Contract No:	2018-0282
	Federal Project No:	TAP-96(49)
	State Project No:	94LPLM-F3-092

Date of Issuance: July 16, 2020

You are directed to make the following change(s) in the Bidding Documents:

(I) Concern and Changes to Bid Submittal Process and Bid Opening:

a. Concern:
Due to the ongoing COVID-19 pandemic, the City of Franklin continues to limit in-person meetings to the maximum extent possible. Because of this, Bidders will not be allowed to attend the Bid Opening in-person.

b. Changes:
The Bid Opening for this project will now be held virtually utilizing Cisco Webex technology. Instructions to access the live Bid Opening via Cisco Webex and additional information are as follow:

- *To Access the Bid Opening BY COMPUTER (Audio & Video):*
  - Click on the following link…JOIN MEETING, *or*
  - Manually enter the following address into your web browser… https://cityoffranklin.webex.com/cityoffranklin/j.php?MTID=m38b049bd80156a89a47ac3030ba371fe
  - Meeting Number: 133 589 1034
  - Password: 9aqSPe94RyF
- *To Access the Bid Opening BY PHONE (Audio Only):* 1-415-655-0003 (US Toll)
- Franklin City Hall is open during the regular business hours of 8:00 AM to 5:00 PM (CDT). Bid shall continue to be submitted to the Engineering Department at Suite 133 of City Hall, Franklin, TN 37064.

(II) Questions from Contractors and Responses (in *red*):

a. Are any geotechnical reports or borings available for this project?
No, a geotechnical report was not part of this project.

b. Please confirm that the design intent is to have the 10" waterline located beneath the roadway?
The plans correctly show the location of the proposed 10" waterline.

c. Please clarify if bid item 204-06.01 Flowable Fill (General) is to be used for backfilling the waterline trench or if it is intended for another item?
It is not to be used to backfill the entire waterline trench. This item is to be used when normal compaction methods cannot be employed due to the proximity of other utilities, etc. It is to be implemented at the discretion of the engineer in the field.

d. Can you please provide specific information on the requirements for the bid item 795-21.11, Retire In-Place Existing Water Line, as we cannot find a detail or specific requirements in the specs.
Upon further review, this line item is being removed from the bid form. The Contractor shall be responsible for removing any water line in conflict with the proposed main; however, for any existing main outside of the aforementioned limits, the Contractor will be required to cut and cap the line and abandon in place (as noted in the plans and quantities). The abandonment of the line will not be paid for per linear foot, but will be paid per each cut and cap item as shown in the bid form. A revised Sheet 2A1 is included to show the removal of line item 795-21.11.

e. Is the intent to remove and replace existing sidewalk in its entirely from approximately Sta. 122+00 to the end of the project at Sta. 123+86.37 (in front of the Bank of America)?
Yes, the existing sidewalk will be removed and replaced in front of the Bank of America. However, please note that the existing curb and gutter are to remain from station 121+81 to 123+86.37. If the existing curb and gutter are damaged, it shall be repaired at the Contractor's expense.

f. The driveways at Sta. 72+24.35 and Sta. 73+54.85 are exposed aggregate concrete paving. The detail for replacement at those areas shows standard concrete driveways. Is the intent to match the existing material at these locations?
Yes, the intent is to match the existing material beyond the limits of the multi-use path. The concrete for the multi-use pavement will not be changed. The plans do not show a separate pay item for this type of concrete driveway. The area of the two driveways total 1,452SF; any additional cost for the different material shall be included in the bid price for item 701-02.

g. There is a detail for a crosswalk on Sheet 2F that includes brick pavers over a concrete base. There is no specific location called out for this type of crosswalk on the plans. Is this detail included for reference as a replacement type for when the crosswalk is impacted at the intersection of 96 & 5th Avenue during the water main installation? There appears to be no

pay item in the proposal for this replacement. Can you please either add a pay item or tell us where the replacement of this item should be covered?
On sheet U1-17, note 6 states, "If the contractor choses to open cut through the decorative crosswalk, it shall be replaced in-kind (see detail sheet 2F). Cost to be included in other items."

h. Please confirm that all pavement patching for water line installation is to be included in the unit price for the pipe.
Per the Pavement Replacement Notes on sheet 2A1, the pavement patching for the water line installation will not be paid for separately but shall be included in the cost of other pay items. We have not specified that it only be included in the unit price for the pipe, but it can be if the contractor so choses.

i. Will mill and overlay be required around the water main trench repairs. Detail G8 in the utility set references a pavement trench repair detail that does not appear to be included in the plan set. Please provide this detail.
The pavement trench repair should follow City of Franklin Transportation and Street Technical Standard RD-7 (attached).

j. The plans are not clear as to whether the existing sidewalk at Freedom Intermediate School gets removed, although it does appear so in some areas. It appears that the sidewalk remains from Sta. 83+51.80 to near Sta. 86+11.62. Can you please clarify whether all or part of this sidewalk is to be removed?
The existing sidewalk at Freedom Intermediate School shall be removed in its entirety from west of Boyd Mill Avenue to Glass Lane. This quantity is included in pay item 202-03

(III) Revised Bid Form:

Included with this addendum is a revised Bid Form. Bidder shall complete the revised Bid Form and shall staple it to the original Bid Form within the Proposal Contract. Please print the revised Bid Form sheets as single-sided only. **DO NOT REMOVE** any pages from the original bound Proposal Contract. The following line item(s) has/have been removed from the Bid Form:

ITEM NO.	ITEM DESCRIPTION	UNIT	EST. QUANTITY
795-21.11	RETIRE IN-PLACE EXISTING WATER LINE	L.F.	2,650

(IV) Attachments:

a. Revised Bid Form, and

b. Revised Plans Sheet 2A1 "Estimated Utility Quantities".

c. City of Franklin *Transportation & Street Technical Standards* Standard Drawing RD-7 "Asphalt Pavement Trench Repair [for] Arterial and Collector Street".

End of Addendum

BID FORM for PIN 123908.00 / COF Contract No. 2018-0282

PART 1 of 2 - PROJECT ESTIMATED QUANTITIES *(As Revised Per Addendum No. 1)*

FOOTNOTE(S)	ITEM NO.	ITEM DESCRIPTION	UNIT	EST. QTY.	UNIT PRICE ($)	EXT. AMOUNT ($)
		ROADWAY & TRAFFIC SIGNAL ITEMS				
	105-01	CONSTRUCTION STAKES, LINES AND GRADES	LS	1		
	201-01	CLEARING AND GRUBBING	LS	1		
1	202-01	REMOVAL OF STRUCTURES AND OBSTRUCTIONS	LS	1		
	202-03	REMOVAL OF RIGID PAVEMENT, SIDEWALK, ETC.	S.Y.	1,400		
	202-08.10	REMOVAL OF CURB (MOUNTABLE CURB)	L.F.	1,040		
	203-01	ROAD & DRAINAGE EXCAVATION (UNCLASSIFIED)	C.Y.	4,490		
	203-03	BORROW EXCAVATION (UNCLASSIFIED)	C.Y.	12,485		
	203-04	PLACING AND SPREADING TOPSOIL	C.Y.	1,515		
5	204-06.01	FLOWABLE FILL (GENERAL)	C.Y.	100		
4, 5	209-03.22	FILTER SOCK (18 INCH)	L.F.	1,220		
4	209-05	SEDIMENT REMOVAL	C.Y.	68		
4, 5	209-08.03	TEMPORARY SILT FENCE (WITHOUT BACKING)	L.F.	5,810		
4, 5	208-08.07	ROCK CHECK DAM	EACH	34		
4, 5	209-08.08	ENHANCED ROCK CHECK DAM	EACH	6		
4, 5	209-09.43	CURB INLET PROTECTION (TYPE 4)	EACH	30		
4, 5	209-40.33	CATCH BASIN PROTECTION (TYPE D)	EACH	24		
4, 5	209-40.44	CATCH BASIN FILTER ASSEMBLY (TYPE 4)	EACH	16		
	303-01	MINERAL AGGREGATE, TYPE A BASE, GRADING D	TON	3,362		
4, 5, 6	303-10.01	MINERAL AGGREGATE (SIZE 57)	TON	93		
	307-01.21	ASP. CONC. MIX (PG70-22) (BPMB-HM) GR. A-S	TON	130		
	307-02.01	ASPHALT CONCRETE MIX (PG70-22) (BPMB-HM) GRADING A	TON	170		
	307-02.08	ASPHALT CONCRETE MIX (PG70-22) (BPMB-HM) GRADING B-M2	TON	845		

BID FORM for PIN 123908.00 / COF Contract No. 2018-0282

PART 1 of 2 - PROJECT ESTIMATED QUANTITIES *(As Revised Per Addendum No. 1)*

FOOTNOTE(S)	ITEM NO.	ITEM DESCRIPTION	UNIT	EST. QTY.	UNIT PRICE ($)	EXT. AMOUNT ($)
	402-01	BITUMINOUS MATERIAL FOR PRIME COAT (PC)	TON	4		
	402-02	AGGREGATE FOR COVER MATERIAL (PC)	TON	12		
	403-01	BITUMINOUS MATERIAL FOR TACK COAT (TC)	TON	11		
3	407-20.05	SAW CUTTING ASPHALT PAVEMENT	L.F.	4,848		
	411-02.10	ACS MIX (PG70-22) GRADING D	TON	655		
3	415-01.02	COLD PLANING BITUMINOUS PAVEMENT	S.Y.	6,600		
3	502-04.01	SAWING CONCRETE PAVEMENT (FULL DEPTH)	L.F.	150		
	604-01.04	1-1/2" STEEL PIPE HANDRAIL	L.F.	1,397		
2	607-02.02	15" CONCRETE PIPE CULVERT (CLASS III)	L.F.	14		
2	607-03.02	18" CONCRETE PIPE CULVERT (CLASS III)	L.F.	2,656		
2	607-05.02	24" CONCRETE PIPE CULVERT (CLASS III)	L.F.	594		
2	607-07.02	36" CONCRETE PIPE CULVERT (CLASS III)	L.F.	922		
2	607-08.02	42" CONCRETE PIPE CULVERT (CLASS III)	L.F.	1,052		
	611-01.02	MANHOLES, > 4' - 8' DEPTH	EACH	9		
	611-01.03	MANHOLES, > 8' - 12' DEPTH	EACH	3		
	611-02.11	JUNCTION BOX, TYPE 2	EACH	1		
	611-02.12	JUNCTION BOX, TYPE 3	EACH	1		
	611-07.01	CLASS A CONCRETE (PIPE ENDWALLS)	C.Y.	25		
	611-07.02	STEEL BAR REINFORCEMENT (PIPE ENDWALLS)	LB.	1,515		
2	611-07.31	18-IN ENDWALL (SIDE DRAIN)	EACH	1		
2	611-07.35	42-IN ENDWALL (SIDE DRAIN)	EACH	1		
	611-12.01	CATCH BASINS, TYPE 12, 0' - 4' DEPTH	EACH	6		
	611-12.02	CATCH BASINS, TYPE 12, > 4' - 8' DEPTH	EACH	12		
	611-14.02	CATCH BASINS, TYPE 14, > 4' - 8' DEPTH	EACH	2		

BID FORM for PIN 123908.00 / COF Contract No. 2018-0282

PART 1 of 2 - PROJECT ESTIMATED QUANTITIES *(As Revised Per Addendum No. 1)*

FOOTNOTE(S)	ITEM NO.	ITEM DESCRIPTION	UNIT	EST. QTY.	UNIT PRICE ($)	EXT. AMOUNT ($)
	701-01.01	CONCRETE SIDEWALK (4")	S.F.	63,080		
3, 5, 14	701-01.02	CONCRETE SIDEWALK (6")	S.F.	1,614		
	701-02	CONCRETE DRIVEWAY	S.F.	8,924		
7	701-02.03	CONCRETE CURB RAMP	S.F.	5,029		
	702-01	CONCRETE CURB	C.Y.	15		
	702-03	CONCRETE COMBINED CURB & GUTTER	C.Y.	290		
13	705-04.07	TAN ENERGY ABSORBING TERM (NCHRP 350, TL3)	EACH	3		
	706-01	GUARDRAIL REMOVED	L.F.	244		
3	707-08.11	HIGH-VISIBILITY CONSTRUCTION FENCE	L.F.	470		
3, 4, 5, 12	709-05.05	MACHINED RIP-RAP (CLASS A-3)	TON	657		
3, 4, 5	709-05.06	MACHINED RIP-RAP (CLASS A-1)	TON	576		
	712-01	TRAFFIC CONTROL	LS	1		
	712-04.01	FLEXIBLE DRUMS (CHANNELIZING)	EACH	400		
	712-06	SIGNS (CONSTRUCTION)	S.F.	335		
	712-07.03	TEMPORARY BARRICADES (TYPE III)	L.F.	360		
3	713-11.02	PERFORATED/KNOCKOUT SQUARE TUBE POST	LB.	900		
3	713-11.21	P POST SLIP BASE	EACH	22		
3	713-13.02	FLAT ALUMINUM SIGNS (0.080" THICK)	S.F.	30		
8	713-15	REMOVAL OF SIGNS, POSTS AND FOOTINGS	LS	1		
3	713-16.01	CHANGEABLE MESSAGE SIGN UNIT	EACH	8		
10	713-16.41	RELOCATE SIGN	LS	1		
3	716-02.05	PLASTIC PAVEMENT MARKING (STOP LINE)	L.F.	275		
3	716-02.06	PLASTIC PAVEMENT MARKING (TURN LANE ARROW)	EACH	6		
3	716-02.09	PLASTIC PAVEMENT MARKING (LONGITUDINAL CROSS-WALK)	L.F.	530		

BID FORM for PIN 123908.00 / COF Contract No. 2018-0282

PART 1 of 2 - PROJECT ESTIMATED QUANTITIES *(As Revised Per Addendum No. 1)*

FOOTNOTE(S)	ITEM NO.	ITEM DESCRIPTION	UNIT	EST. QTY.	UNIT PRICE ($)	EXT. AMOUNT ($)
3	716-04.05	PLASTIC PAVEMENT MARKING (STRAIGHT ARROW)	EACH	8		
3	716-05.01	PAINTED PAVEMENT MARKING (4" LINE)	L.F.	4,600		
3	716-05.02	PAINTED PAVEMENT MARKING (8" BARRIER LINE)	L.F.	3,000		
3	716-13.01	SPRAY THERMO PAVEMENT MARKING (60 mil) (4-IN LINE)	L.M.	1.50		
	717-01	MOBILIZATION	LS	1		
11	730-01.05	REMOVE & RELOCATE SCHOOL SIGNAL EQUIPMENT	LS	1		
15	730-01.03	MODIFICATION OF EXISTING TRAFFIC SIGNAL EQUIPMENT	EACH	2		
	730-03.21	INSTALL PULL BOX (TYPE B)	EACH	5		
3	730-08.02	SIGNAL CABLE - 5 CONDUCTOR	L.F.	1,470		
3	730-12.13	CONDUIT 2" DIAMETER (JACK AND BORE)	L.F.	735		
16	730-13.13	VEHICLE DETECTOR (RADAR)	EACH	5		
17	730-23.30	PEDESTAL POLE (10-FT)	EACH	7		
	730-26.11	COUNTDOWN PEDESTRIAN SIGNAL HEAD W/AUDIBLE PUSH BUTTON & 15-IN SIGN	EACH	8		
4, 5	740-10.03	GEOTEXTILE (TYPE III) (EROSION CONTROL)	S.Y.	2,394		
4, 5	740-11.03	TEMPORARY SEDIMENT TUBE (18-IN)	L.F.	800		
3, 9	797-08.06	8-IN PVC PIPE FOR SERVICE LATERIAL	L.F.	108		
	801-01.07	TEMPORARY SEEDING (WITH MULCH)	UNIT	260		
	801-03	WATER (SEEDING & SODDING)	M.G.	135		
	803-01	SODDING (NEW SOD)	S.Y.	10,900		
					ROADWAY & TRAFFIC SIGNAL SUBTOTAL:	

BID FORM for PIN 123908.00 / COF Contract No. 2018-0282

PART 1 of 2 - PROJECT ESTIMATED QUANTITIES *(As Revised Per Addendum No. 1)*

FOOTNOTE(S)	ITEM NO.	ITEM DESCRIPTION	UNIT	EST. QTY.	UNIT PRICE ($)	EXT. AMOUNT ($)
		WATER LINE ITEMS (NON-PARTICIPATING)				
18	604-01.01	CLASS A CONCRETE (ROADWAY)	C.Y.	5		
3, 21	795-01.05	8-IN DIP RESTRAINED JOINT WATERLINE	L.F.	210		
3, 21	795-01.07	10-IN DIP RESTRAINED JOINT WATERLINE	L.F.	3,120		
3, 21	795-01.17	20-IN DIP RESTRAINED JOINT WATERLINE	L.F.	147		
22	795-06.04	CONNECT TO 6-IN WATER LINE	EACH	7		
22	795-06.05	CONNECT TO 8-IN WATER LINE	EACH	2		
22	795-06.07	CONNECT TO 12-IN WATER LINE	EACH	1		
22	795-06.10	CONNECT TO 18-IN WATER LINE	EACH	1		
22	795-06.11	CONNECT TO 20-IN WATER LINE	EACH	3		
	795-06.33	CUT AND CAP 6-IN WATERLINE	EACH	5		
	795-06.34	CUT AND CAP 8-IN WATERLINE	EACH	1		
	795-06.35	CUT AND CAP SERVICE LINE	EACH	1		
23	795-08.05	8-IN GATE VALVE ASSEMBLY	EACH	6		
23	795-08.06	10-IN GATE VALVE ASSEMBLY	EACH	14		
24	795-09.01	3/4-IN WATER SERVICE METER ASSEMBLY	EACH	4		
3, 25	795-09.28	3/4-IN COPPER SERVICE PIPE	L.F.	454		
3	795-09.51	RECONNECT SERVICE ASSEMBLY	EACH	13		
24	795-10.01	3/4-IN AUTO AIR RELEASE VALVE ASSEMBLY	EACH	1		
24	795-11.02	FIRE HYDRANT ASSEMBLY	EACH	7		
19, 26	795-11.03	RECONNECT FIRE HYDRANT	EACH	1		
27	795-12.01	REMOVE FIRE HYDRANT	EACH	6		
27	795-12.08	REMOVE WATER METER	EACH	5		
3	795-12.20	ADJUST EXISTING VALVE BOXES	EACH	2		

BID FORM for PIN 123908.00 / COF Contract No. 2018-0282

PART 1 of 2 - PROJECT ESTIMATED QUANTITIES *(As Revised Per Addendum No. 1)*

FOOTNOTE(S)	ITEM NO.	ITEM DESCRIPTION	UNIT	EST. QTY.	UNIT PRICE ($)	EXT. AMOUNT ($)
3, 28	795-13.01	DI FITTINGS	LB.	9,820		
20	797-07.60	ADJUST EXISTING MANHOLE	EACH	1		
					WATER LINE SUBTOTAL:	
		GAS LINE ITEMS (NON-PARTICIPATING)				
29	791-03.02	2-IN HDPE GAS MAIN	L.F.	1,400		
30	791-06.23	CONNECT TO 2-IN EX. PE MAIN	EACH	4		
31	791-07.01	2-IN PE GAS VALVE ASSEMBLY	EACH	4		
32	791-08.02	3/4-IN SERVICE ASSEMBLY	EACH	4		
32	791-08.05	2-IN SERVICE ASSEMBLY	EACH	1		
32	791-08.07	3/4-IN SERVICE PIPE	L.F.	40		
32	791-08.10	2-IN SERVICE PIPE	L.F.	900		
33	791-10.01	RETIRE IN-PLACE 3/4-IN SERV. CUT & PLUG	EACH	4		
33	791-10.02	RETIRE IN-PLACE 1-IN SERV. CUT & PLUG	EACH	1		
33	791-10.04	RETIRE IN-PLACE 2-IN SERV. CUT & PLUG	EACH	1		
					GAS LINE SUBTOTAL:	
					BID TOTAL (ROADWAY & TRAFFIC SIGNAL SUBTOTAL + WATER LINE SUBTOTAL + GAS LINE SUBTOTAL):	

TOTAL BID PRICE (IN WORDS): _____

TOTAL BID PRICE ($): _____

TYPE	YEAR	PROJECT NO.	SHEET NO.
CONST.	2018	TAP-96(49)	2A1

REV. 7/16/2020

REMOVED PAY ITEM 795-21.11

ESTIMATED WATER LINE QUANTITIES (NON-PARTICIPATING)

	ITEM NO.	DESCRIPTION	UNIT	QUANTITY
(1)	604-01.01	CLASS A CONCRETE (ROADWAY)	C.Y.	5
(4)(5)	795-01.05	8IN DIP RESTRAINED JOINT WATER LINE	L.F.	210
(4)(5)	795-01.07	10IN DIP RESTRAINED JOINT WATER LINE	L.F.	3120
(4)(5)	795-01.17	20IN DIP RESTRAINED JOINT WATER LINE	L.F.	147
(6)	795-06.04	CONNECT TO 6IN WATER LINE	EACH	7
(6)	795-06.05	CONNECT TO 8IN WATER LINE	EACH	2
(6)	795-06.07	CONNECT TO 12IN WATER LINE	EACH	1
(6)	795-06.10	CONNECT TO 18IN WATER LINE	EACH	1
(6)	795-06.11	CONNECT TO 20IN WATER LINE	EACH	3
	795-06.33	CUT AND CAP 6IN WATERLINE	EACH	5
	795-06.34	CUT AND CAP 8IN WATERLINE	EACH	1
	795-06.35	CUT AND CAP SERVICE LINE	EACH	1
(7)	795-08.05	8IN GATE VALVE ASSEMBLY	EACH	6
(7)	795-08.06	10IN GATE VALVE ASSEMBLY	EACH	14
(8)	795-09.01	3/4IN WATER SERVICE METER ASSEMBLY	EACH	4
(4)(9)	795-09.28	3/4IN COPPER SERVICE PIPE	L.F.	454
(4)	795-09.51	RECONNECT SERVICE ASSEMBLY	EACH	13
(8)	795-10.01	3/4" AUTO AIR RELEASE VALVE ASSEMBLY	EACH	1
(8)	795-11.02	FIRE HYDRANT ASSEMBLY	EACH	7
(2)(10)	795-11.03	RECONNECT FIRE HYDRANT	EACH	1
(11)	795-12.01	REMOVE FIRE HYDRANT	EACH	6
(11)	795-12.08	REMOVE WATER METER	EACH	5
(4)	795-12.20	ADJUST EXISTING VALVE BOXES	EACH	2
(4)(12)	795-13.01	DI FITTINGS	LB.	9820
(3)	797-07.60	ADJUST EXISTING MANHOLE	EACH	1

FOOTNOTES:

1) TO BE USED AS CONCRETE PROTECTION FOR BURIED UTILITIES PER DWG NO G-9.

2) SHALL INCLUDE THE COST FOR ANY ADJUSTMENT TO GRADE.

3) ADJUSTMET OF SANITARY MANHOLE REQUIRED DUE TO GRADING NEAR BOYD MILL AVE.

4) QUANTITY MAY BE INCREASED, DECREASED,OR ELIMINATED AS DIRECTED BY THE ENGINEER.

5) INCLUDES ALL MATERIALS, LABOR, EQUIPMENT FOR COMPLETE INSTALLATION OF PIPE INCLUDING BUT NOT LIMITED TO TRAFFIC CONTROL, MATERIALS, EQUIPMENT, EXCAVATION IN BOTH UNCONSOLIDATED AND ROCK, REMOVAL AND REPLACEMENT OF UNSUITABLE SOIL, ENVELOPE/BEDDING MATERIAL, BACKFILLING, FLOWABLE FILL, THRUST BLOCKING, CONCRETE DEADMAN, PIPE FUSION, TRACER WIRE, WARNING TAPE, APPURTENANCES, TEMPORARY/PERMANENT SHORING, MAINTAINING THE TRENCH, TESTING, FLUSHING, DISINFECTION, BACTERIOILOGICAL SAMPLING, TEMPORARY/PERMANENT SURFACE RESTORATION, AND ANY OTHER LABOR OR MATERIAL REQUIRED TO COMPLETE THE WORK AS SPECIFIED ON THE PLANS.

6) INCLUDES ALL MATERIALS, LABOR, AND EQUIPMENT NECESSARY FOR CONNECTING TO AN EXISTING WATER LINE INCLUDING TRAFFIC CONTROL.

7) INCLUDES ALL MATERIALS, LABOR AND EQUIPMENT INCLUDING BUT NOT LIMITED TO FITTINGS, VALVE, VALVE STEM EXTENSIONS, VALVE BOX AND COVER, BOX ADJUSTMENT, VALVE MARKER, EXCAVATION, BEDDING, BACKFILL, BLOCKING, AND TRAFFIC CONTROL.

8) INCLUDES ALL MATERIALS, LABOR AND EQUIPMENT INCLUDING BUT NOT LIMITED TO MACHINERY, TOOLS OR APPARATUS NECESSARY FOR INSTALLATION OF ASSEMBLIES AS DESCRIBED IN THE PLANS AND SPECS EXCEPT FOR SERVICE LINE WHICH IS PAID SEPERATELY FOR EACH FOOT INSTALLED. THIS ITEM SHALL ALSO INCLUDE THE MATERIALS, LABOR AND EQUPMENT FOR THE INSTALLATION OF PROTECTIVE BOLLARDS AROUND FIRE HYDRANTS.

9) INCLUDES ALL MATERIALS, LABOR AND EQUIPMENT FOR COMPLETE INSTALLATION OF SERVICE LINE OR CASING FOR SERVICE LINE ON LONG SIDE AND SHORT SIDE OF MAIN.

10) INCLUDES ALL MATERIALS, LABOR, AND EQUIPMENT TO DISCONNECT AND RECONNECT EXISTING FIRE HYDRANT TO A NEW LINE.

11) INCLUDES ALL MATERIALS, LABOR AND EQUIPMENT FOR REMOVAL OF ITEM AND ANY PROTECTIVE BOLLARDS.

12) INCLUDES FITTINGS, GLANDS AND RESTRAINT DEVICES DESCRIBED IN POUNDS.

PAVEMENT REPLACEMENT NOTES:

1. THE CONTRACTOR IS TO PROVIDE THE NECESSARY LABOR, MATERIALS AND EQUIPMENT TO RESTORE AND MAINTAIN THE VARIOUS STREET AND DRIVEWAY SURFACES OF ALL TYPES, PAVEMENT AND DRIVEWAY BASES DISTURBED, DAMAGED, OR DEMOLISHED DURING THE PERFORMANCE OF THE WORK.

2. BEFORE TRENCHING IN PAVED AREAS THE CONTRACTOR SHALL SAW-CUT THE PAVEMENT IN A STRAIGHT LINE ALONG THE SIDES OF THE PROPOSED TRENCH TO ALLOW FOR PAVEMENT REMOVAL AND TRENCH EXCAVATION WITHOUT DAMAGE TO ADJACENT PAVEMENT. DURING CONSTRUCTION SUITABLE PRECAUTIONS SHALL BE TAKEN TO PROTECT THE PAVEMENT EDGES AND SURFACES AND TO MINIMIZE DAMAGE. CONTRACTOR SHALL UTILIZE TRENCH BOXES OR OTHER OSHA APPROVED SHORING METHOD SUCH THAT TRENCH OPENING AT ANY LOCATION WITHIN THE STREET IS LIMITED TO 10 FEET WIDE. EXCAVATION WILL NOT BE PAID FOR SEPARATELY, BUT SHALL BE INCLUDED IN THE COST OF OTHER PAY ITEMS.

3. THE CONTRACTOR IS RESPONSIBLE FOR A TEMPORARY PAVEMENT PATCH IMMEDIATELY AFTER BACK FILL IS PLACED IN THE TRENCH CUT. THE TEMPORARY PATCH SHALL BE MAINTAINED UNTIL THE PERMANENT PAVEMENT PATCH SPECIFIED IS PLACED IN THE AREA OF THE TRENCH CUT. THE WORK TO COMPLETE THE TEMPORARY PATCH WILL NOT BE PAID FOR SEPARATELY, BUT SHALL BE INCLUDED IN THE COST OF OTHER PAY ITMES.

4. NEW MANHOLE CASTINGS OR OTHER UTILITY CASTINGS SHALL BE INSTALLED TO AN ELEVATION 1 1/4" ABOVE THE GRADE OF THE PERMANENT PAVEMENT PATCH. A TEMPORARY RAMP SHALL BE CONSTRUCTED BY FEATHERING A COLD MIX FOR 360 DEGREES AROUND THE CASTING. A TAPER SLOPE OF NOT LESS THAN TWO FEET PER ONE INCH SHALL BE USED. DURING THE FINAL OVERLAY PAVING OPERATION THE TEMPORARY RAMP SHALL BE REMOVED FROM AROUND THE CASTING TO ALLOW FOR THE PERMANENT PAVING INSTALLATION.

5. ALL ROADWORK OPERATIONS SHALL BE COORDINATED WITH THE CITY OF FRANKLIN STREET DEPARTMENT AND TDOT. ALL WORK TO REMOVE AND REPLACE THE PAVEMENT FOR VEHICULAR OR PEDESTRIAN FACILITIES WITHIN THE LIMITS OF THE WATERLINE WORK WILL NOT BE PAID FOR SEPARATELY BUT SHALL BE INCLUDED IN THE COST OF OTHER PAY ITEMS.

WATER NOTES:

1. CONTRACTOR TO USE OPEN JOINT DEFLECTION IN ACCORDANCE WITH PIPE MANUFACTURERS RECOMMENDATIONS WHERE REQUIRED TO MAINTAIN ALIGNMENT AS SHOWN ON DRAWINGS.

2. CONTRACTOR SHALL LOCATE EXISTING UTILITIES AT ANY CROSSING OR ANY OTHER LOCATION WHERE HIS WORK MAY ENCOUNTER THEM AND SHALL TAKE WHATEVER STEPS NECESSARY TO PROTECT THE EXISTING UTILITIES. CONTRACTOR SHALL BE RESPONSIBLE FOR COST OF ALL DAMAGES CAUSED BY HIS FAILURE TO ACCURATELY LOCATE AND PROTECT EXISTING UTILITIES.

3. THE EXISTENCE, ABSENCE, LOCATIONS, AND DEPTHS OF UTILITIES AND UNDERGROUND ITEMS HAVE BEEN DEFINED BY ORDINARY SURVEYING METHODS FROM FIELD OBSERVATIONS AND FROM INFORMATION FURNISHED BY THE UTILITY COMPANIES, AND ARE NOT GUARANTEED.

4. CONTRACTOR SHALL COORDINATE THE ELEVATION AND ALIGNMENT OF THE PROPOSED WATER LINES WITH OTHER CONSTRUCTION WORK IN PROGRESS TO AVOID CONFLICTS WITH PROPOSED AND EXISTING UTILITIES.

5. THE CONTRACTOR IS RESPONSIBLE FOR COORDINATION WITH ALL NECESSARY AGENCIES (TDOT, CITY OF FRANKLIN, ETC.).

6. IN AREAS SUBJECT TO TRAFFIC THE ENTIRE TRENCH SHALL BE BACKFILLED WITH CRUSHED STONE UNLESS OTHERWISE SHOWN ON THE PLANS OR DIRECTED BY THE ENGINEER.

7. FOR PERMANENT TRENCH REPAIR REFER TO WATER LINE TRENCH DETAIL SHOWN ON THE CITY OF FRANKLIN STANDARD DRAWING G-8. THE PAVEMENT SECTION SHALL MATCH WHAT IS SHOWN ON SHEETS 2B AND 2B1.

8. THE CONTRACTOR IS RESPONSIBLE FOR THE DESIGN AND INSTALLATION OF THE TRAFFIC CONTROL DURING WATER LINE CONSTRUCTION OPERATIONS AND SHALL COMPLY WITH ALL REQUIREMENTS CONTAINED IN THE MANUAL ON UNIFORM TRAFFIC CONTROL DEVICES. THE CONTRACTOR SHALL PROVIDE THE PLAN TO THE CITY AND TDOT FOR APPROVAL PRIOR TO STARTING WORK ALL COST FOR PROVIDING TRAFFIC CONTROL WILL NOT BE PAID FOR SEPARATELY BUT SHALL BE MERGED INTO THE UNIT PRICE BID FOR THE WORK AND NO ADDITIONAL PAYMENT SHALL BE MADE FOR PROVIDING TRAFFIC CONTROL

9. CONSTRUCTION SHALL CONFORM TO THE STANDARD WATER SPECIFICATIONS FOR THE CITY OF FRANKLIN UNLESS OTHERWISE NOTED AND APPROVED BY THE ENGINEER.

10. NO PORTION OF THE WORK SHALL BE PLACED IN SERVICE UNTIL IT HAS BEEN CLEANED, TESTED, DISINFECTED, INSPECTED, AND APPROVED BY THE OWNER.

11. ALL FITTINGS SHALL BE RESTRAINED JOINT UNLESS OTHERWISE APPROVED BY THE OWNER AND ENGINEER. FOR RESTRAINED JOINT PIPE AND FITTINGS REFER TO SECTION 3 OF THE WATER LINE SPECIFICATIONS.

12. CONTRACTOR TO REMOVE EXISTING FIRE HYDRANTS AS SHOWN AND RETURN TO OWNER.

13. AFTER NEW WATER METER ASSEMBLIES ARE INSTALLED ALL ABANDONED WATER METER ASSEMBLIES SHALL BE REMOVED AND RETURNED TO OWNER AT NO ADDITIONAL COST.

14. ALL VALVES AND BOXES ON THE ABANDONED WATER LINES SHALL BE REMOVED AND RETURNED TO THE OWNER AT NO ADDITIONAL COST.

15. THE CONTRACTOR IS RESPONSIBLE FOR MAINTAINING ALL EXISTING WATER SERVICES WHILE CONSTRUCTION OFTHE NEW WATER LINE IS BEING PERFORMED.

SEALED BY

BRIAN A. RALSTIN
REGISTERED ENGINEER
No. 119683
STATE OF TENNESSEE
4/29/19

HISTORIC FRANKLIN TENNESSEE

CITY OF FRANKLIN
ENGINEERING DEPARTMENT

ESTIMATED UTILITY QUANTITIES

7/16/2020 10:33:58 AM
Y:\nashville\16017000S\16017035.00\Survey\Estimated Utility Quanities.sht

STEP 1
TRENCH REPAIR

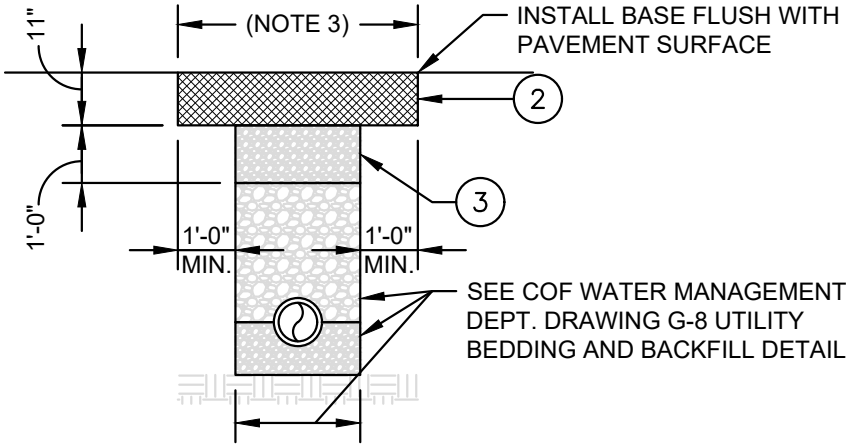

STEP 2
FULL WIDTH MILL AND OVERLAY

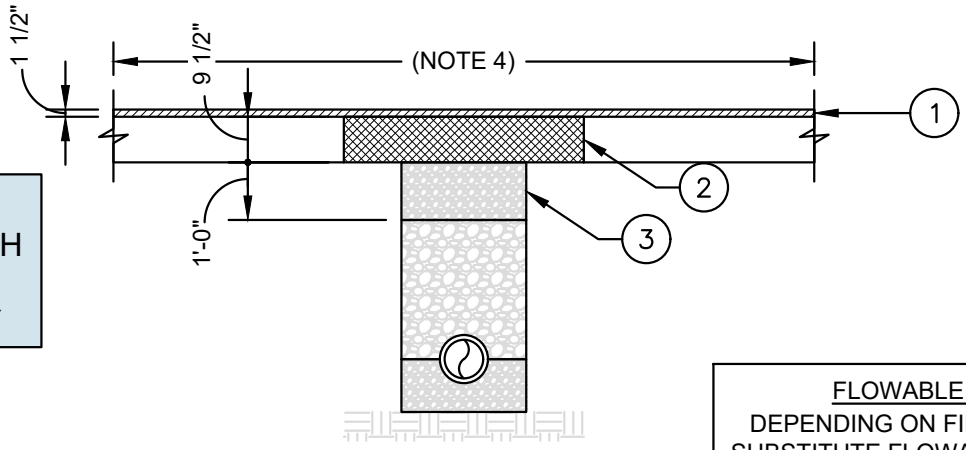

FLOWABLE FILL NOTE

DEPENDING ON FIELD CONDITIONS, SUBSTITUTE FLOWABLE FILL BACKFILL (200 PSI MAX.) FOR THAT SHOWN AS DIRECTED BY THE COF WATER MANAGEMENT OR STREET DEPTS.

PAVEMENT SCHEDULE

1. 1.5" - BITUMINOUS SURFACE COURSE
   411-02.10 ACS MIX (PG 70-22) GRADING D RDWY
2. BITUMINOUS AGGREGATE BASE
   307-02.08 ASPHALT CONCRETE MIX (PG 70-22) (BPMB-HM) GRADING B-M2
3. MINERAL AGGREGATE BASE (PLACED IN LIFTS NOT EXCEEDING 6")
   303-01 MINERAL AGGREGATE, TYPE A BASE, GRADING D

TACK AND PRIME COATS NOT SHOWN FOR CLARITY. SEE DRAWINGS RD-1 AND RD-2.

NOTES

1. CONTRACTOR SHALL COORD. TRENCH, BACKFILL, AND PAVEMENT INSPECTIONS WITH THE COF STREET DEPARTMENT.
2. ALL CUTS IN PUBLIC STREETS REQUIRE A STREET CROSSING PERMIT AND APPROVED TRAFFIC CONTROL PLAN.
3. SAWCUT EXISTING PAVEMENTS, BASES, CURB AND GUTTER, AND SIDEWALKS (CUT JOINT TO JOINT) IN NEAT LINES.
4. AT PERPENDICULAR STREET CUTS, MILL AND OVERLAY SHALL EXTEND A MINIMUM OF 100 FEET CENTERED ON THE TRENCH. AT PARALLEL STREET CUTS, MILL AND OVERLAY SHALL EXTEND A MINIMUM DISTANCE FROM THE EDGE OF PAVEMENT TO THE CENTERLINE OF STREET. FINAL LIMITS SHALL BE DETERMINED BY THE CITY ENGINEER.

HISTORIC FRANKLIN TENNESSEE

ASPHALT PAVEMENT TRENCH REPAIR ARTERIAL AND COLLECTOR STREET

CITY OF FRANKLIN

NOT TO SCALE

CITY ENGINEER: Paul P Holz

DATE: 7/1/2020

DWG. NO.

RD-7